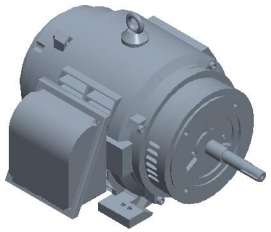

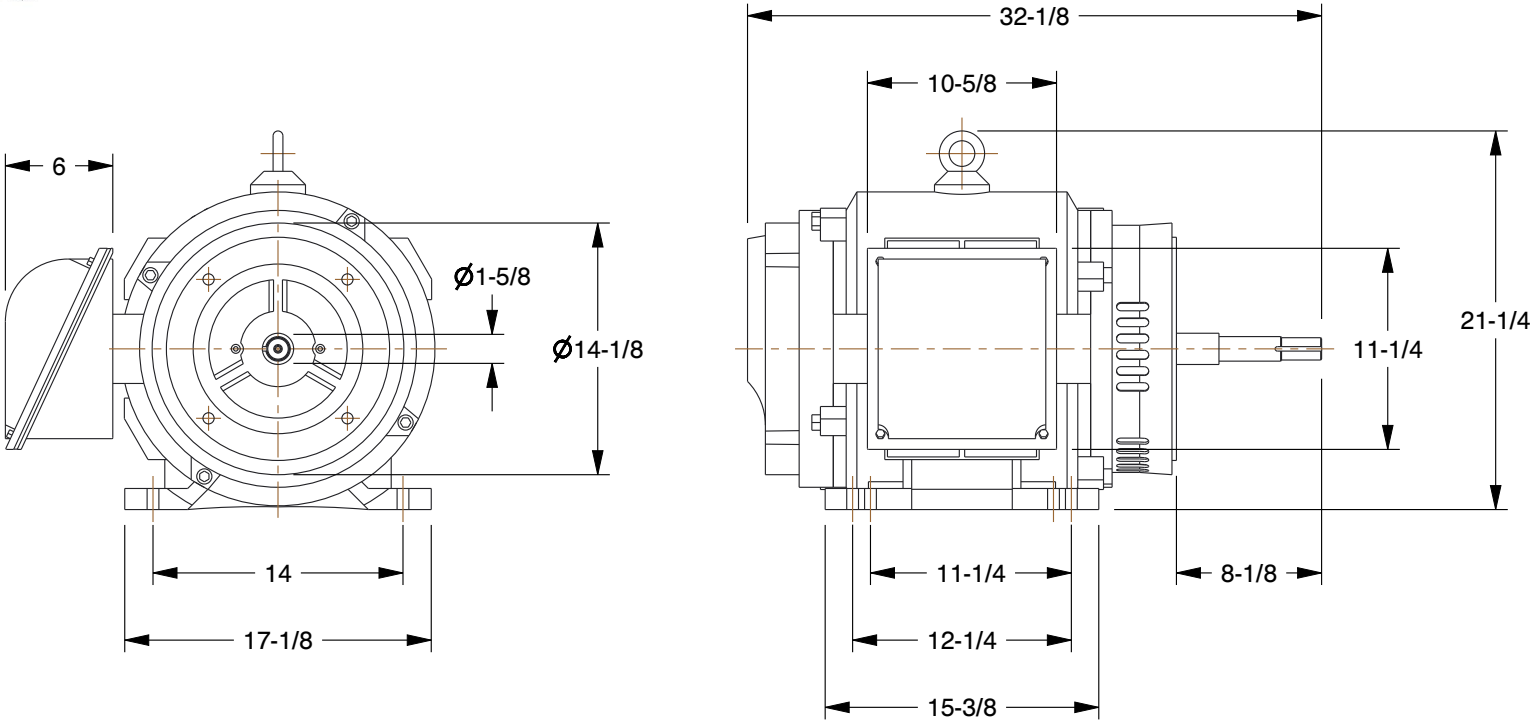

COMPONENT	Close-Coupled Pump Motor

GRAINGER®

100 Grainger Parkway, Lake Forest, Illinois 60045-5201
1-(800) GRAINGER, 1-(800) 472-4643, (847) 535-1000
www.grainger.com

This file and any associated information and specifications are provided for reference and evaluation purposes only, and is subject to change without notice. Grainger makes no representations, warranties or guarantees as to the appropriateness, accuracy, completeness, or suitability for any purpose, of the file, information or specifications. You are solely responsible for the use of the file, information or specifications.

This drawing is the property of GRAINGER. It contains confidential, proprietary information that is GRAINGER property. Do not disclose to or duplicate for others except as authorized by GRAINGER.

SCALE	0.08

4EUR4

Close-Coupled Pump Motor: Open Dripproof, Face/Base Mounting, 75 HP, 3,550 Nameplate RPM

UNIT
INCH
SHEET
1 of 1