Spears® Technical Information

14-Sep-21 02:07:13 AM

Part No: 469SE-529SR **Schedule 40 White** **Clamp-On Saddle**

Desc: 6X2-1/2 PVC CLAMP SADDLE D/O SRFPT EPDM

MSRP: 314.37 **Part Code:** 046

Weight(lbs): 5.95 **Weight(kg):** 2.699 **Weight(gm):** 2699

Size: 6"X2-1/2" **Color:** WHITE **Material:** PVC

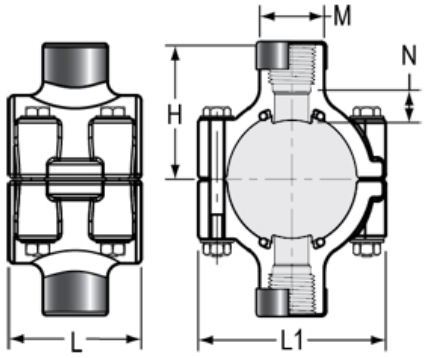

Connection Double SR Fipt (Clamp-On)

O-Ring EPDM

Hardware SS

H = 6-9/32	**L** = 6	**Min Hole Size** = 3	**Bolt Torque FT./LBS.** = 10	**L1** = 8-3/16
M = 4-5/16	**N** = 1-13/32	**No of Bolts** = 4		

Injection Molded Dimension References:

G = (LAYING LENGTH) intersection of center lines to bottom of socket/thread; 90° elbows, tees, crosses; ± 1/32 inch.

H = Intersection of center lines to face of fitting; 90° elbows tees, crosses; ± 1/32 inch.

J = Intersection of center lines to bottom of socket/thread; 45° elbows; ± 1/32 inch

L = Overall length of fittings; ± 1/16 inch.

M = Outside diameter of socket/thread hub; ± 1/16 inch.

N = Socket bottom to socket bottom; couplings; ± 1/16 inch.

W = Height of cap; ± 1/16 inch

Typical Bushing Dimension References

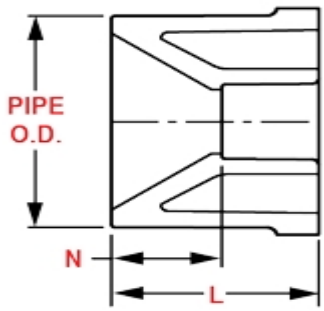

The information printed here is based on current information & product design at the time of publication and is subject to change without notification. Spears® ongoing commitment to product improvement may result in some variation. No representation, guarantees or warranties of any kind are as to its accuracy, suitability for particular application or results to be obtained thereform. For verification of technical data or additional information, please contact Spears® Technical Service Department :: WEST COAST : (818) 364-1611 - EAST COAST : (717) 938-9006