See-Through Liquid Separators

STS Series 1” - 6”

Overview

Inlet air with potentially harmful liquid and large particulate enters the housing and is separated by a baffle mechanism and directional air flow changes. The larger particles and liquid drop down and collect at the bottom of the separator. The float capsule within the separator screen rises with the liquid level until max capacity and limits the flow, thereby protecting the pump from damage.

Benefits

- Minimize the likelihood of damage to vacuum valves and pumps from liquid
- Protect installed equipment from liquid contamination by retrofitting STS separator
- Easy visual inspection with see-through housing
- Reduce piping costs with T-style configuration
- Compact design for space restricted work areas

Technical Specifications

- Compact design for space restrictions; min. service area
- Inlet above element for extended element life & maintenance intervals
- Corrosive resistant cast aluminum top with machined connections and integrated baffle design
- Shatter-resistant polycarbonate drop down bucket
- Stainless steel float capsule for emergency shut-off
- Stainless steel perforated float tube (SS expanded metal on 1” to 1 1/2”)
- Clamp style swing bolts on 3” & 4” standard
- Drain

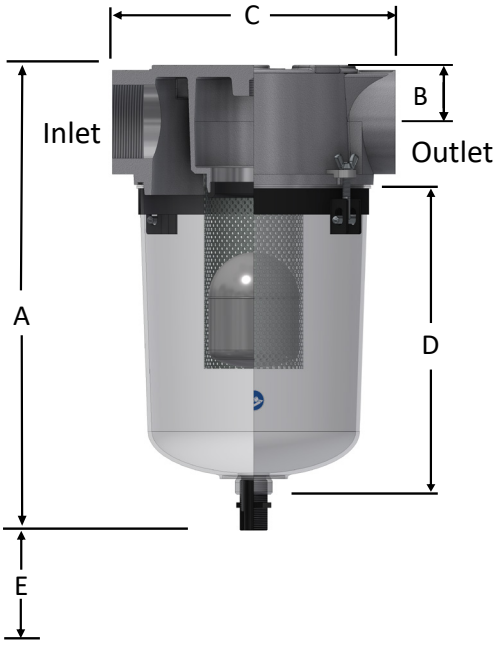

Inlet / Outlet		Assembly SCFM Rating	Assembly Part Number	Dimensions (inches)				Suggested Service Height	Holding Capacity (gallons)
Size	Type			A	B	C	D	E	
3/4"	NPSC	25	STS-075C	10.84	1.00	5.00	6.87	5”	0.15
1”	NPSC	25	STS-100C	15.89	1.52	7.00	11.09	10”	0.4
1 1/4”	NPSC	40	STS-125C	15.89	1.52	7.00	11.09	10”	0.4
1 1/2”	NPSC	60	STS-150C	15.89	1.52	7.00	11.09	10”	0.4
2”	NPSC	105	STS-200C	18.57	2.01	9.00	13.05	8”	1
2 1/2”	FNPT	115	STS-250C	18.57	2.01	9.36	13.05	8”	1
3”	FNPT	240	STS-300C	22.20	2.70	13.50	14.77	10”	2
4”	FNPT	250	STS-400C	22.20	2.70	13.50	14.75	10”	2
6”	FNPT	550	STS-600C	30.55	3.89	19.00	22.16	15”	4

Technical Specifications

- Vacuum Rating: medium vacuum service
- Temp (continuous): min -15°F (-26°C) max 220°F (104°C)*

*Temperature for materials only.

Learn More

For more information about Solberg products and finding the right solutions for your equipment needs, visit us at **SolbergMfg.com**.

Contact Us

solbergmfg.com/locations

All model offerings and design parameters are subject to change without prior notice.
Contact your representative or visit www.solbergmfg.com for the most current information.

SOLBERG