SLOAN 150-3.5-3-3/4-LDIM

CODE NUMBER

3781626

DESCRIPTION

3.5 gpf, Rough Brass Finish, Fixture Connection Not Included, Single Flush, 3.75 L Dimension, Standard (not included, order separately) Wall Box, Sloan® Concealed Manual Water Closet Flushometer.

DETAILS

- Flush Volume: 3.5 gpf (13.2 Lpf)
- Finish: Rough Brass
- Valve: Diaphragm
- Valve Body Material: Semi-red Brass
- Fixture Type: Water Closet
- Fixture Connection: Not Included
- L Dimension: 3 ¾" (95mm) (3-3/4-LDIM)
- Wall Box: Standard (not included, order separately)

FEATURES

- Metal Direct Acting, Non-Hold-Open Push Button with Triple Seal Handle Packing
- 1” I.P.S. Wheel Handle Bak-Chek® Angle Stop
- Vacuum Breaker
- Non-Hold-Open Push Button, Fixed Metering Bypass and No External Volume Adjustment to Ensure Water Conservation
- Diaphragm, Handle Packing and Vacuum Breaker to be molded from PERMEX® Rubber Compound for Chloramine Resistance
- 1” Female I.P.S. Union Outlet
- PERMEX® Synthetic Rubber Diaphragm with Linear Filtered Bypass and Vortex Cleansing Action

COMPLIANCES & CERTIFICATIONS

(BAA Compliant, BABAA Compliant, Made in the USA, UPC Certified)

RECOMMENDED SPECIFICATION

Valve Body, Cover, Tailpiece and Control Stop shall be in conformance with ASTM Alloy Classification for Semi- Red Brass. Valve shall be in compliance with the applicable sections of ASSE 1037 and ANSI/ASME 112.19.2.

VALVE OPERATING PRESSURE (FLOWING)

15–80 PSI (103–552 kPa). Specific fixtures may require greater minimum flowing pressure - consult manufacturer requirements.

DOWNLOADS

- Sloan Concealed Installation Instructions
- Control Stop Repair and Maintenance Guide
- Flush Connections Flanges Repair and Maintenance Guide
- Tail Piece Repair and Maintenance Guide
- Concealed Flushometers Repair and Maintenance Guide
- Sloan/Regal ESS Repair and Maintenance Guide
- Additional Downloads

NOTES

All information contained within this document subject to change without notice.

Looking for other variations of the SLOAN 150 product? View the general spec sheet with all options.

WARRANTY

View Warranty Information

Sloan 10500 Seymour Ave, Franklin Park, IL 60131
Phone: 800.982.5839 • Fax: 800.447.8329 • sloan.com

ROUGH-IN

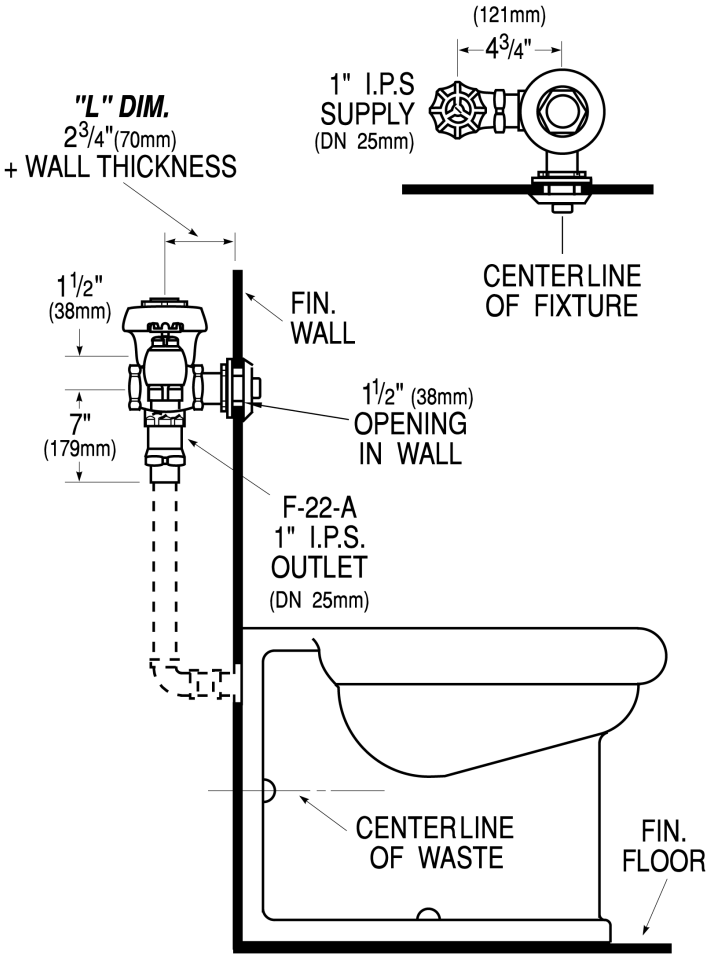
(121mm)
4 3/4"
1" I.P.S
SUPPLY
(DN 25mm)
"L" DIM.
2 3/4"(70mm)
+ WALL THICKNESS
CENTERLINE
OF FIXTURE
1 1/2"
(38mm)
FIN.
WALL
1 1/2" (38mm)
OPENING
IN WALL
7"
(179mm)
F-22-A
1" I.P.S.
OUTLET
(DN 25mm)
CENTERLINE
OF WASTE
FIN.
FLOOR