AMETEK®
DYNAMIC FLUID SOLUTIONS

Prestolite motors

Product Bulletin

Model: MUX-6302

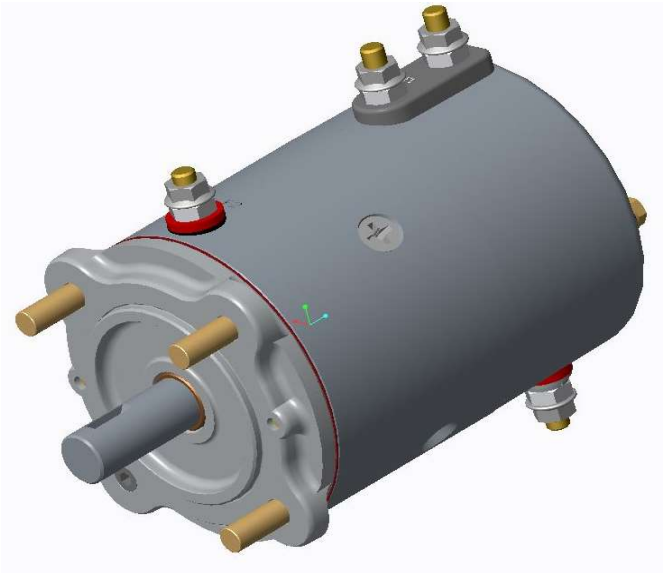

DESCRIPTION

114mm, 4.5 Inch Frame Size
24 Volt DC
Series Wound
Drive Motor
Reversible Rotation

SPECIAL FEATURES

Ø.748 inch shaft
Shaft Keyslot

DESIGN APPLICATION

Winches and Hoists
Marine Windlasses
Anchor Hoists

TYPICAL MOTOR PERFORMANCE.* (At 24volts, DC, test data is 29.7 Hg, 70° F.)

* Data represents performance of a typical motor sampled from a large production quantity. Individual motor data may vary due to normal manufacturing variations.

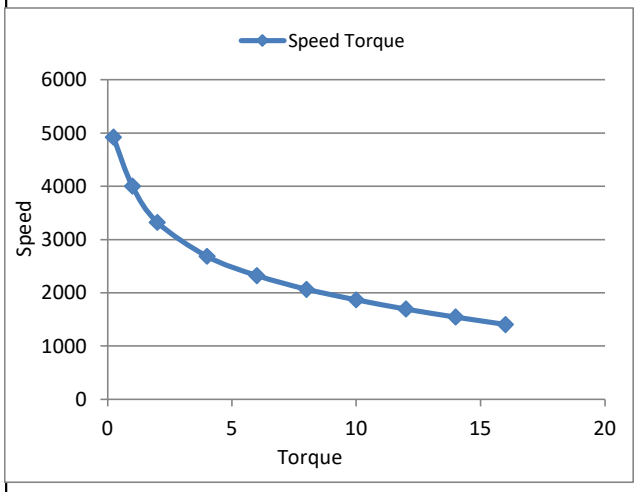

Torque Lb-ft	Amps	Watts	Corr Watts	RPM	HP Out	Watts Out	Eff
0.23	36.9			4921	0.22		18.1%
1	48.9			4004	0.76		48.6%
2	64.2			3324	1.27		61.3%
4	92.7			2684	2.04		68.6%
6	120.9			2326	2.66		68.3%
8	148.5			2067	3.15		65.9%
10	175.5			1867	3.56		63.0%
12	202.2			1695	3.87		59.5%
14	228.8			1543	4.11		55.9%
16	255.9			1405	4.28		52.0%

IMPORTANT NOTE: *Pictorial and dimensional data are subject to change without notice. Contact factory for current revision levels.*

WARNING - When using AMETEK Lamb Electric bypass motors in machines that come in contact with foam, liquid (including water), or other foreign substances, the machine must be designed and constructed to prevent those substances from reaching the fan system, motor housing, and electrical components. Lamb Electric vacuum motors other than hazardous duty models should not be applied in machines that come in contact with dry chemicals or other volatile materials. Failure to observe these precautions could cause flashing (depending on volatility) or electrical shock which could result in property damage and severe bodily injury, including death in extreme cases. All applications incorporating Lamb Electric motors should be submitted to appropriate organizations or agencies for testing specifically related to the safety of your equipment.

DIMENSIONS

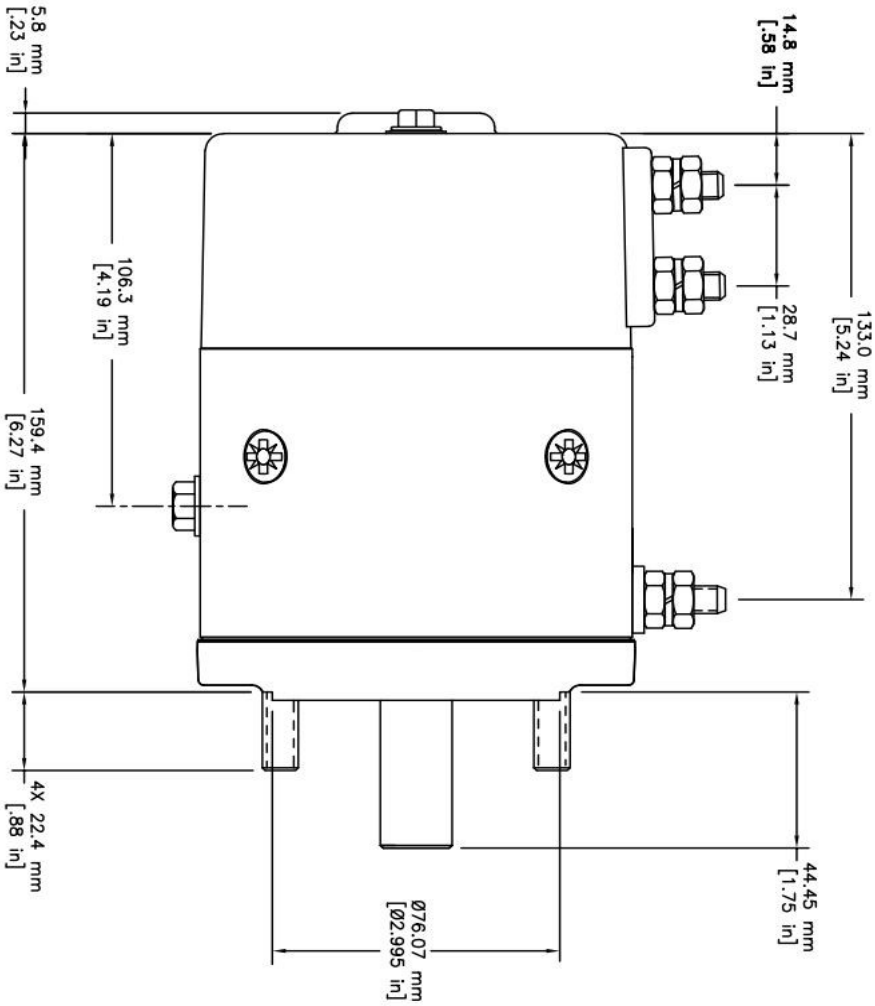

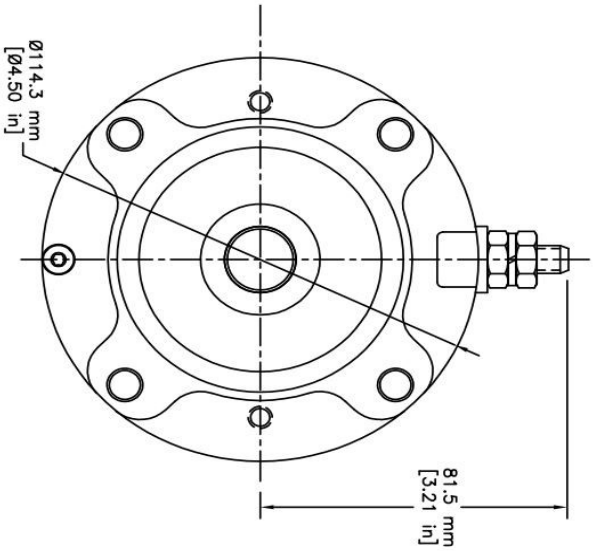

AMETEK Dynamic Fluid Solutions

www.ametekdfs.com

Created October 2020