PATLITE®

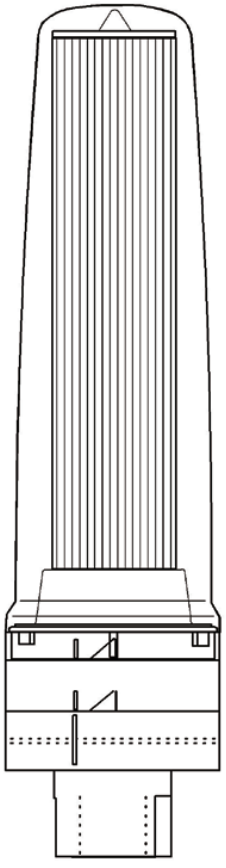

SIGNAL TOWER

Model **LS7-9**

IP69K RATED LED SIGNAL TOWER LIGHT

INSTRUCTION MANUAL

[Maintenance Version]

Installation | Operation | Maintenance

		Page
1	Safety Precautions	2
2	Model Number Configuration	3
3	Part Names and Outer Appearance	3
4	Stackable Tower Construction	4
5	Block Diagram	4
6	Installation	5-6
7	Wiring	7-9
8	Volume Adjustment	10
9	Inspection	11
10	Troubleshooting	12
11	Specifications	13
12	Replacement Parts	14
13	Optional Parts	15
14	Dimensions for Mounting	15

Notice to Customer

Thank you very much for purchasing PATLITE products.

- It is recommended that the installation and wiring be performed by a professional contractor if construction work is involved.
- Prior to installation or using this product, please read this manual thoroughly to ensure correct use.
- After reviewing this manual, if there are any questions regarding this product, please contact the nearest PATLITE office listed on the back cover of this manual.

Notice to Contractor

- Read this manual carefully prior to installation.
- Be sure to return this manual to the customer.

1 Safety Precautions

Safety Precautions

⚠ WARNING Failure to observe the following may result in death or serious injury.

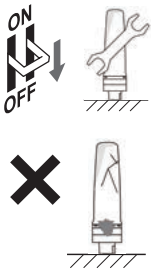

To prevent short-circuits, electric shock or damage, observe the following:

- Be sure the signal light is disconnected from the power supply before wiring or performing repair work.
- Use the signal light in a properly maintained condition.
  (If parts such as the base or outer cover are cracked, they should be repaired.)

It is recommended that the installation and wiring be performed by a professional contractor if construction work is involved. Failure to comply may result in fire, electric shock or falling from high places.

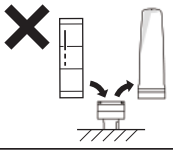

Do not modify or disassemble the signal light.

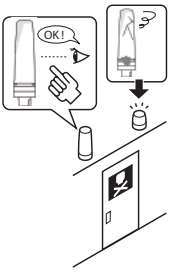

To ensure proper safety while using the signal light, observe the following:

- Perform periodic pre-maintenance.
  (→ " 9 Inspection" (P.11))
- As a precaution, we suggest using this product with other back up safety equipment

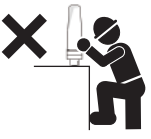

To ensure safety when the signal light is installed onto equipment, observe the following.

- Do not use the signal light as leverage when climbing up onto the equipment. Failure to comply will result in falling from a high place, or damage to the product.
- When performing tasks such as opening the covers of the equipment, be careful not to snag anything on the signal light. Failure to observe may result in damage.

⚠ CAUTION If the following are not observed, injury to personnel or physical damage may result.

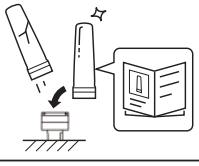

Use only the specified replacement parts listed in this manual.

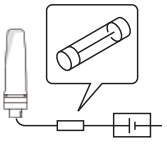

To protect the power supply and other internal circuitry, be sure to install an external fuse.

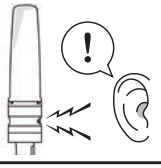

Avoid long exposure to the buzzer sound from a close distance. Failure to observe this may lead from irritation to permanent damage to the ears.
(B Buzzer included specifications)

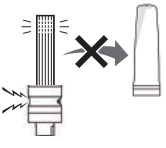

Do not disassemble or detach the unit while the unit is in operation.

Signal Light Application

This product is a multipurpose signal light, designed principally for giving notifications of the operating status for FA (Factory Automation) equipment in factories, etc., using LEDs and buzzers※.

※ B Buzzer included specifications only

Instruction Manual Objective

- The images in this manual may vary in comparison to the actual product and are only for the purpose of illustration.
- Store this manual for future reference.

2 Model Number Configuration

	Model	Number of LED Modules	Rated Voltage	Body Color	Flashing	Buzzer	Mounting	Wiring	Adaptor Color	LED Color
Model Number	LS7-	↓	02	↓	↓	↓	W	↓	↓	-RYGBC

5	5 LED Tiers
3	3 LED Tiers

Common to all models	Rated Voltage: 24 V DC

none	Off-white
D	Dark Gray
S	Silver

none	Illumination Only
F	Illumination and Flashing

none	Buzzer not Included
B	Buzzer Included

Common to all models
Direct Installation Only

C	M12 Connector
H	Lead Wires

* [F] Illumination and Flashing function is only available for the [H] lead wires specifications

LED colors in order from top to bottom
(5 tiers) Red, Amber, Green, Blue and White
(3 tiers) Red, Amber and Green, blank (N), blank (N)

9N	IP69K Adaptor, Off-white
9D	IP69K Adaptor, Black

* [9N] for Off-white tower
[9D] for Silver tower
[9D] for Dark Gray tower

Model Number Example

LS7-502WC9N-RYGBC
- Body color - Off-white
- Buzzer - Not Included
- Lighting - Illumination only
- Input - M12 connector

LS7-502SFBWH9D-RYGBC
- Body color - Silver
- Buzzer - Included
- Lighting - Illumination and flashing
- Input - Lead wires

3 Part Names and Outer Appearance

■ Buzzer not included C M12 connector specifications ■ B Buzzer included H Lead wires specifications

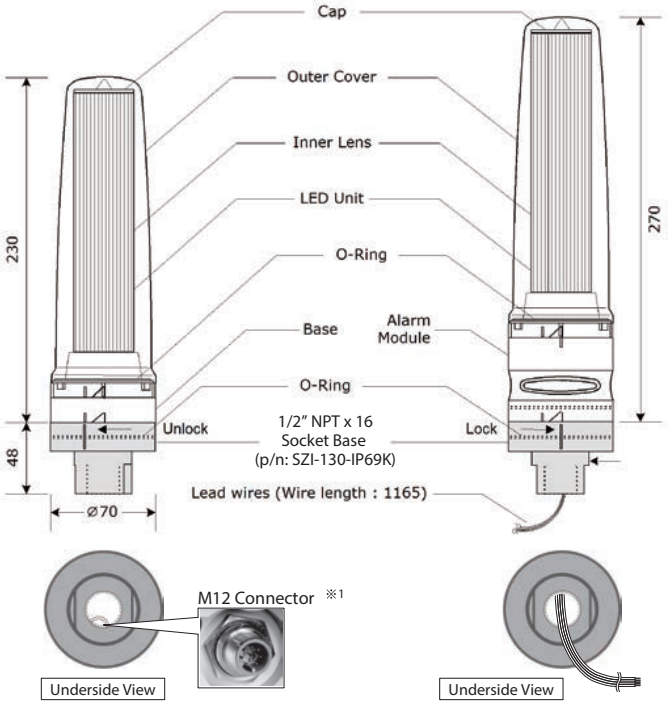

※1 About the M12 Connector

- It is recommended to use the optional connector with cable for wiring. (→" 13 Option Parts" (P.15))
  (Note) It is not included for this product (LS7).
- Because the M12 connector is inside the signal light, be sure to allow a sufficient length of cable.

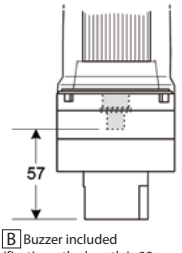

(For B Buzzer included specifications, the length is 89 mm.)

(Note) The Signal Light LED array is not replaceable.

(Units: mm)

4 Stackable Tower Construction

What is a 'Stackable Structure'?

The ‘stackable structure’ is a feature which allows the main signal light unit and the outer cover to be separated with just a single touch. (Previous signal lights require tools to disassemble, such as removing screws.)

The 'stackable structure' makes maintainance and inspection easier.

⚠ CAUTION	Never disassemble or remove any parts outside the stackable parts.

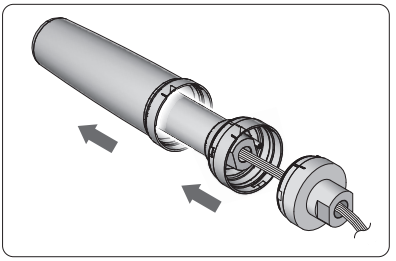

Procedure for removing the stackable parts

Refer to the procedure below to remove the stackable parts.
To reinstall, follow the procedure in the reverse order.
The following example is for a model without a buzzer included.
The removal procedure is the same for the outer cover or the Optional Parts.(→ “ 13 Optional Parts” (P.15))

1 Unlock the base.

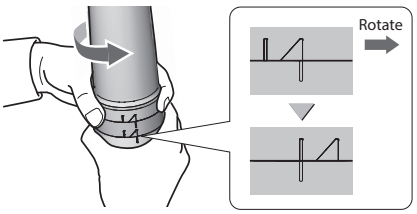

Hold the base and the 1/2” NPT socket base, and rotate until the bar marks are aligned.

Tip
- The lock may be stiff.
- When reinstalling, fully rotate the base until the triangle mark and bar mark are aligned.

2 Remove the base.

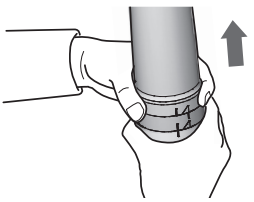

Pull the base in the upward direction to remove it.

Tip
- Do not twist the base too hard when removing it.

Tip For models equipped with a buzzer, the signal light is equipped with a buzzer case instead of a base.

WARNING: Incorrect installation of the 1/2” NPT Adaptor can result in the loss of the IP69K rating.

5 Block Diagram

The following illustrates the internal block diagram for the signal light. Use it as reference when wiring.

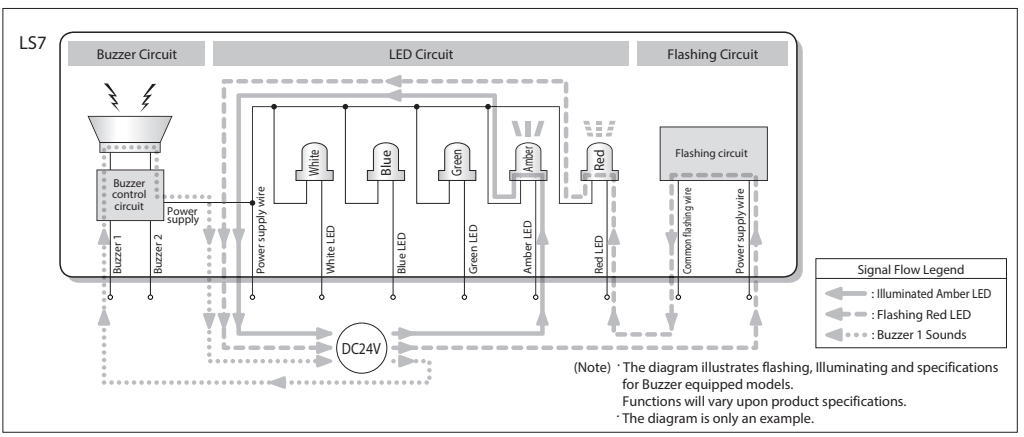

(Note) ・The diagram illustrates flashing, Illuminating and specifications for Buzzer equipped models.
Functions will vary upon product specifications.
・The diagram is only an example.

6 Installation

⚠ CAUTION

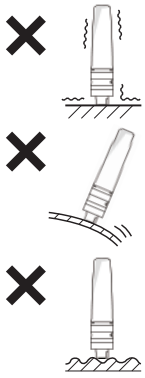

The following requirements are necessary for proper installation.

- Install the signal light where excessive vibration is not present.
- Install the signal light on a sturdy surface.
- Install the signal light on a level surface.

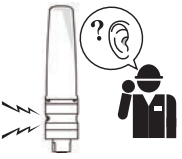

The buzzer is unidirectional. Position the signal light so that the buzzer diaphragm is facing the desired sound direction.
(B Buzzer included specifications)

Use a soft cloth, etc., dampened with water to wipe the main signal light unit.
(Do not use cleaners containing chemicals such as thinner, alcohol, gasoline or oil.)

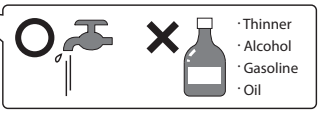

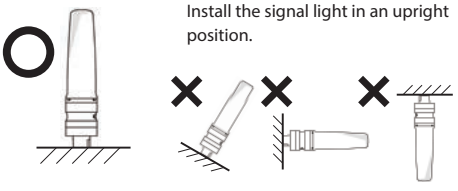

Install the signal light in an upright position.

Sound Pressure might decrease in an environment where water is splashing.

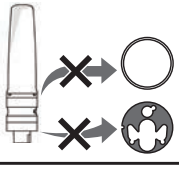

To ensure the waterproofing performance of this product, do not remove the O-ring or the waterproof packing.

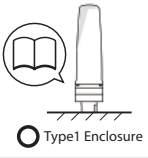

For use on a flat surface of a type 1 enclosure when device is installed as intended.

General Installation

(Note) Refer to the individual Instruction manuals for the Platform bracket and Wall-mount bracket when installing.

1 Verify the signal light installation position.

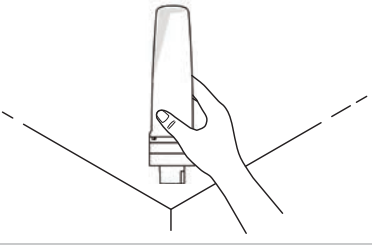

Tip

- Use the following tips to check the following:
  - Will it obstruct other equipment?
  - Can the wiring be routed properly?
  - Where is the buzzer direction facing?
    (B Buzzer included specifications)
  - Make sure ½"NPT mounting is provided.

2 Provide proper hardware needed for mounting.

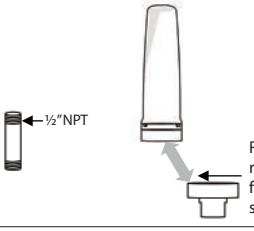

3 Prepare mounting surface as required.

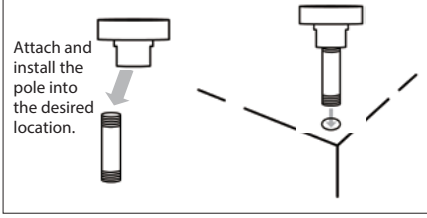

Continued on next page

4 Attach the main unit to the mount.

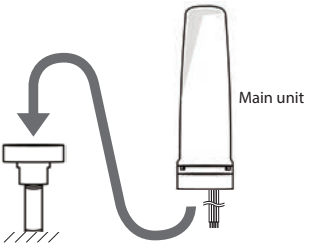

Thread the lead wires through the socket base and pipe, before installing the main unit to the mount.

Tip

- For the C M12 connector option, thread the cable through the wiring hole and mount before connecting it to the main unit.
- Refer to " 4 Stackable Tower Construction" (→P.4) for details on how to remove the mount.
- Be careful not to pinch the lead wires or cable.
- Adjust the sound to the desired level.
  (Refer to " 8 Volume Adjustment" (→P.10))
  (B Buzzer included specifications)
- Make sure to allow some slack for the lead wires or cable in order to adjust the volume.
  (B Buzzer included specifications)

7 Wiring

⚠ WARNING

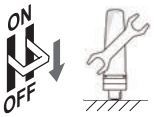

Prior to wiring, ensure the power supply is disconnected from the signal light.

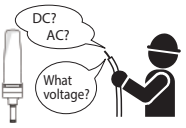

Verify the power supply voltage and whether it is direct current or alternating current.

⚠ CAUTION

Never apply a voltage to the "flashing common" wire.
Failure to observe will result in damage to the circuitry. (F Illumination and flashing specifications)

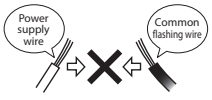

Never connect the power supply wire to the "flashing common" wire.
Failure to observe will result in damage to the circuitry. (F Illumination and flashing specifications)

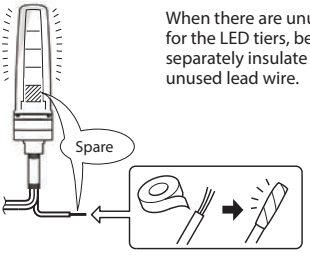

When there are unused lead wires for the LED tiers, be sure to separately insulate the ends of each unused lead wire.

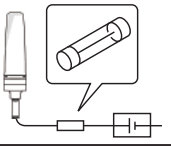

To protect the power supply and other internal circuitry, be sure to install an external fuse.

Do not pull on the lead wire.

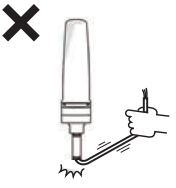

Do not push lead wires up into the main unit.

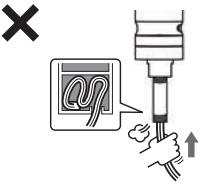

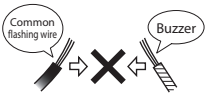

Do not connect the "flashing common" wire with the buzzer wire.
(B Buzzer included specifications)

Quick Tips

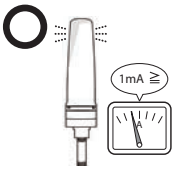

If the leakage current from equipment, such as a PLC unit output, is 1mA or more, the LEDs may show a dim illumination, but it is not the sign of a problem.

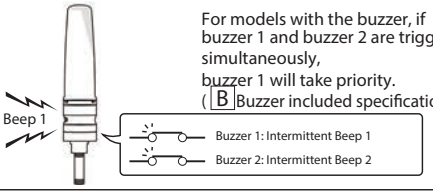

For models with the buzzer, if buzzer 1 and buzzer 2 are triggered simultaneously,
buzzer 1 will take priority.
(B Buzzer included specifications)

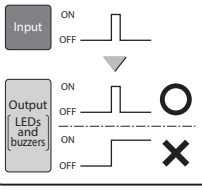

The LEDs and the buzzers will only operate when a signal input is present.
(They do not operate on one-shot signal pulses.)

When adding an additional length of wire, use the appropriate wire lengths and wire diameters to ensure there are no voltage drops.

Wiring Examples

Wiring examples are shown in accordance to the signal light model and external contact type.
If the signal light is being used under special conditions and there are any questions, contact our PATLITE office prior to performing any wiring.

⚠ CAUTION	Do not connect unused lead wires to external contacts when unnecessary. Insulate all unused lead wires with insulation tape, etc.

General Wiring Example

Red LED Red / ⑥

Name of function

PIN No. (C M12 connector specifications)

→ Refer to the "M12 Connector Pin Layout" illustration to the right.

Lead wire color
H Lead wires specifications)

M12 Connector Pin Layout

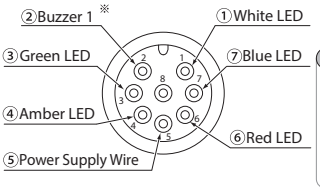

※ B Buzzer included specifications only

Tip

・It is recommended to use the optional connector with cable for wiring.
(→ " 13 Option Parts" (P.15))

Product specifications	Illumination only Buzzer not included / B Buzzer included	Model	LS7-502 □(B) W □ 9□

External Contact — Relay Contact

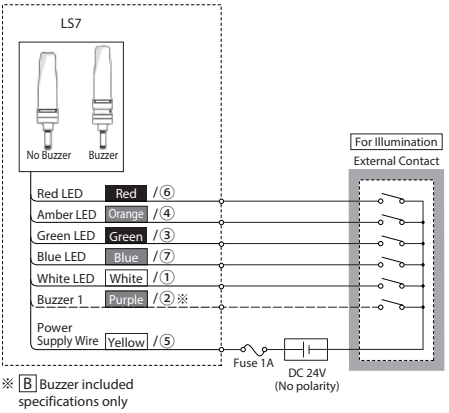

※ B Buzzer included specifications only

External Contact — PLC (NPN transistor type)

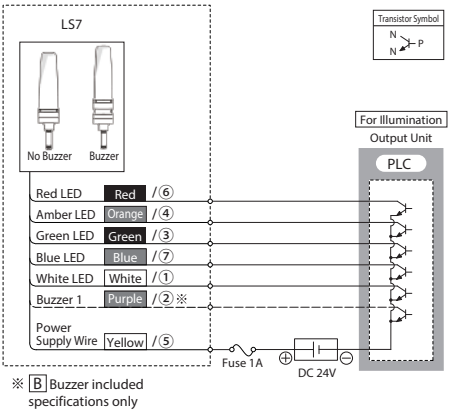

※ B Buzzer included specifications only

External Contact — PLC (PNP transistor type)

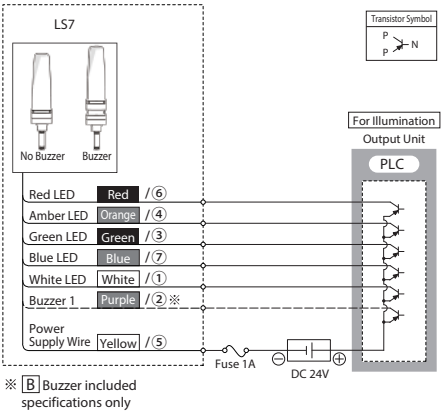

※ B Buzzer included specifications only

Product specifications	F Illumination and Flashing B Buzzer Included	Model	LS7-502 □FBWH9 □

(Note) When using illuminating and flashing features together, it is necessary to have separate output units for the illuminating and flashing functions at the PLC side.

External Contact — Relay Contact

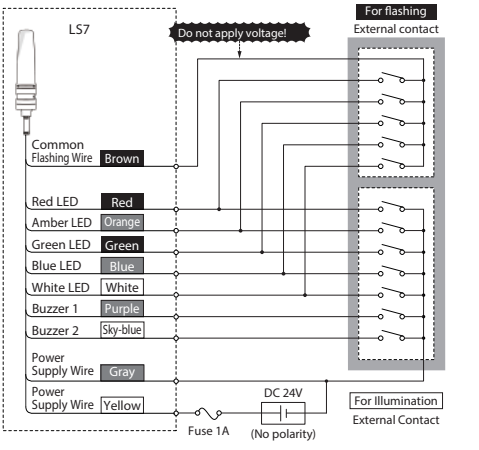

External Contact — PLC (NPN transistor type)

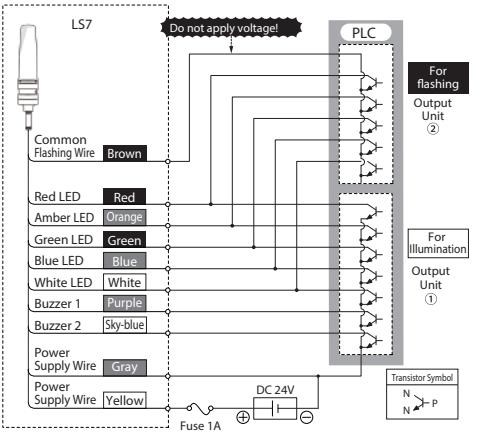

External Contact — PLC (PNP transistor type)

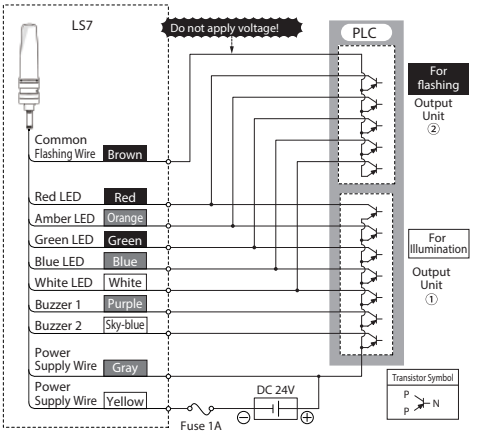

8 Volume Adjustment

The volume adjustment of the buzzer is done by inserting a screwdriver into the volume adjustment hole of the buzzer case.
Refer to "4 Stackable Tower Construction" (→ P.4) for details on removing the buzzer case.

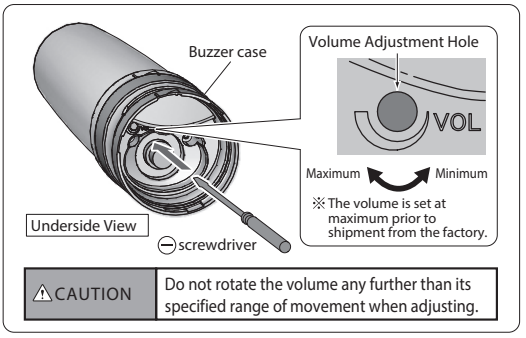

9 Inspection

To ensure safe operation, it is recommended to perform the following:

Inspection Item	Inspection Repair
Are all the LEDs illuminated?	Refer to the " 10 Troubleshooting" section (→ P.12) if they do not illuminate.
Are all the buzzer functions sounding? (For models equipped with the Buzzer function, only)	Refer to the " 10 Troubleshooting" section (→ P.12) if they do not sound.
Check the outside appearance. Is there any damage?	If there is any external damage such as cracks, or missing parts, stop using the signal light and replace the necessary parts or the main unit. (Refer to " 12 Replacement Parts" (→ P.14))

10 Troubleshooting

If a problem occurs, check the following table to remedy the problem before calling for service.

No.	Problem	Where to Check	Solution
1	The LEDs do not illuminate.	Is the wiring properly connected?	Refer to "7 Wiring" (→P.7-9) to double-check the wiring connection.
		Is the power supply at the correct voltage?	Be sure to use a 24V DC power supply.
		Is the fuse blown?	If the fuse is blown, replace it.
2	A different LED light turned on from what I was expecting.	Is the wiring properly connected?	Refer to "7 Wiring" (→P.7-9) to double-check the wiring connection.
3	The buzzer does not sound.	Is the wiring properly connected?	Refer to "7 Wiring" (→P.7-9) to double-check the wiring connection.
		Is the power supply at the correct voltage?	Be sure to use a 24V DC power supply.
		Is the fuse blown?	If the fuse is blown, replace it.
		Double-check the product model.	Only signal lights with a B in the model type are equipped with a buzzer function.
4	The buzzer volume is too low.	Is the buzzer volume set to minimum?	Refer to "8 Volume Adjustment" (→P.10) for adjusting the volume.
5	When I connect to the "buzzer 2" connection, "buzzer 1" will sound.	Is the external contact for "Buzzer 1" turning on?	Priority is given to "buzzer 1" when simultaneous signal inputs to "buzzer 1" and "buzzer 2" are applied.
		Is the wiring properly connected?	Refer to "7 Wiring" (→P.7-9) to double-check the wiring connection.
6	The LEDs do not flash.	Is the wiring properly connected?	Refer to "7 Wiring" (→P.7-9) to double-check the wiring connection.
		Are the external contacts for lighting turning on?	Priority is given to the lighting input over the flashing input when simultaneous signals are applied.
		Double-check the product model.	Only signal lights with an F in the model type are equipped with a flashing function.
7	How is the outer cover and base (buzzer case) removed?	Only designated parts of the signal light's stackable structure allows removable parts.	Refer to "4 Stackable Tower Construction" (→P.4) for proper assembly and disassembly. (Never disassemble or remove any parts other than the stackable parts.)

If the problem is not corrected, even after the above solutions have been performed, use the table below to make detailed notes of the product, its problem, and then contact either the place of purchase or your nearest PATLITE Sales Representative.

● The place of purchase ● The PATLITE Office (Refer to back cover)

Product Details			
Product name	LED SIGNAL LIGHT	Purchase Date	/ /
Model	(→" 2 Model Number Configuration" (P.3))	Symptoms of Problem	With as much detail as possible

11 Specifications

Product Specifications

Model		LS7-□02 (Blank/D/S) WC9(D/N)	LS7-□02 (Blank/D/S) WH9(D/N)	LS7-□02 (Blank/D/S) BWC9(D/N)	LS7-□02 (Blank/D/S) FBWH9(D/N)
Rated Voltage		DC 24V			
Installation Location		Indoor use only			
Maximum surrounding air temperature rating		60℃			
Power Consumption	LED	30 mA per tier (Red:20mA)			
	Buzzer	–		40mA	30mA
Standby Current		–			10mA※
Buzzer Duration		–		520msec.	
Sound Pressure (at 1m)		–		Approx.82dB	Buzzer 1 : Approx.82dB Buzzer 2 : Approx.85dB
Inrush Current		–		150mA	
Flashing Frequency		–			60±12 times/min.
Wire Type		UL1007			
Wire Gauge		AWG22			
Mass		Approx.460g		Approx.490g	
Ingress Protection Rating		IP69K - Suitable for high pressure, high temperature washdowns			

※The standby current is based on a product with an operating LED, with the buzzer included, the current will be higher.

External Contact Specifications

■ Contact Relay Type (Switch)

Rated Voltage Load	Rated Current	
	LED	Buzzer
DC24V	100 mA or more per level	200 mA or more

■ PLC Output Unit

Rated Voltage Load	Rated Current		Leakage Current
	LED	Buzzer	
DC24V	100 mA or more per level	200 mA or more	0.1 mA or less

12 Replacement Parts

The following are replacement parts available for this product. For further details, visit www.patlite.com.

Outer Cover

O-ring included

PART #: B45110011-F1

O-ring

PART #: Z35721039-F1

1/2" NPT Bracket

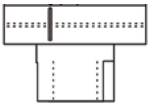

PART # (Natural White):
SZI-130-IP69K-N

PART # (Dark Gray):
SZI-130-IP69K-D

NOTE:
Please refer to section 4 Stackable Tower Contruction, P.4, for instructions on how to attach to the base to the 1/2" NPT Adaptor.

WARNING:
Incorrect installation of the 1/2" NPT Adaptor can result in the loss of the IP69K rating.

13 Option Parts

This product includes the following option parts. For details, refer to www.patlite.com.

M12 Connector with Cable

(Lengths : 2m · 5m · 10m)

PART NUMBERS:

SZ-120-02	2m 8 pole M12 female cable with leads
SZ-120-05	5m 8 pole M12 female cable with leads
SZ-120-10	10m 8 pole M12 female cable with leads

14 Dimensions for Mounting*

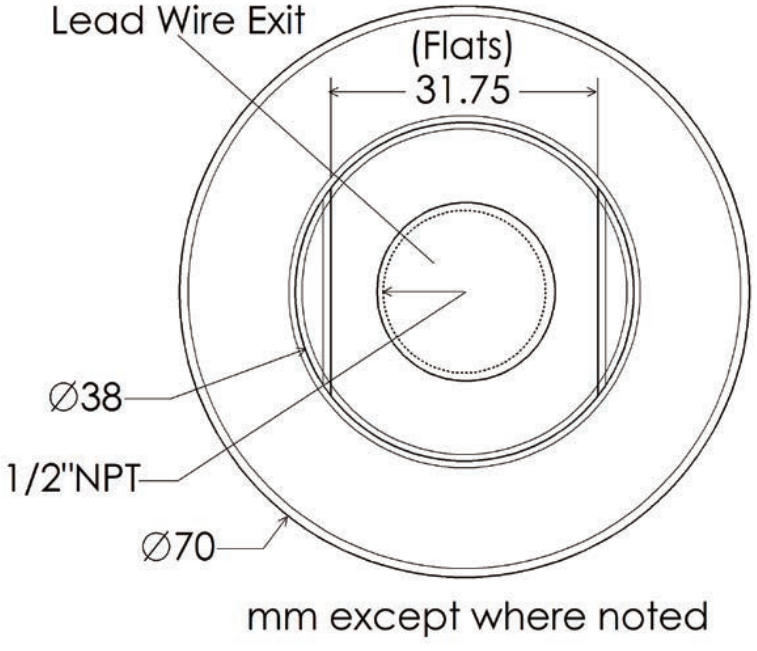

* Drawing is not to scale and does not represent the actual size.

PATLITE Corporation

G2G

PATLITE (U.S.A.) Corporation ■http://www.patlite.com/
20130 S. Western Ave. Torrance, CA 90501, U.S.A. TEL: 310-328-3222 EMAIL: sales@patlite.com

PATLITE Corporation ※Head office ■http://www.patlite.com/
PATLITE Europe GmbH ※Germany ■http://www.patlite.eu/
PATLITE (SINGAPORE) PTE LTD ■http://www.patlite.com/
PATLITE (CHINA) Corporation ■http://www.patlite.cn/
PATLITE KOREA CO., LTD. ■http://www.patlite.co.kr/
PATLITE TAIWAN CO., LTD. ■http://www.patlite.tw/
PATLITE (THAILAND) CO., LTD. ■http://www.patlite.co.th/

The latest product information can be viewed on our company's website. www.patlite.com

(Note)
- Dimensions, specifications and structure are subject to change for improvement without notice.
- PATLITE is a trademark or registered trademark of the PATLITE Corporation in JAPAN and/or other countries.

Copyright © 2011 PATLITE Corporation All Rights Reserved.