Micrometer Head XY-Stage, Thimble 49mm

Item number: 152-389

Images

Description

A Y-axis style bidirectionally graduated large-thimble, non-digital Mitutoyo micrometer head with plain Ø 18 mm stem and heavy-duty Ø 8 mm spindle fitted with flat non-rotating tip.

Features

Digital/Analog:	Analog
Inch-Metric:	Metric
Range:	0 - 25 mm
Graduation:	0.005 mm
Max. Permissible Error J MPE:	±2 µm
Spindle end:	Flat with non-rotating device
Spindle pitch:	1 mm
Stem Ø:	18 mm
Stem:	Plain
Special features:	For Y-axis Bidirectional grad.
Delivered:	In a paper box
Measuring face:	Hardened steel (>60HRC)
Mass:	270 g
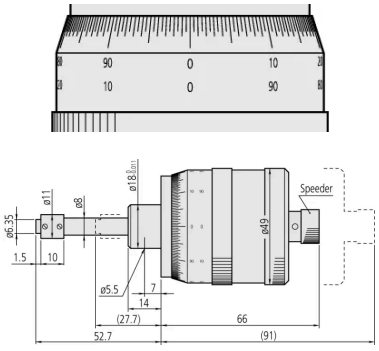
Dimensions