Can Seam Micrometer

Item number: 147-104

Images

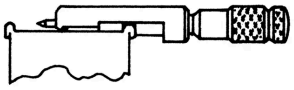

Description

A Mitutoyo non-digital micrometer for measuring the width, height and depth of steel-can seams.

Features

Digital/Analog:	Analog
Inch-Metric:	Inch
Range:	0 - 5 "
Graduation:	0,001"
Max. Permissible Error J MPE:	±0.00015"
Delivered:	Including box, spanner, hex wrench
Remarks:	For steel cans
Measuring face:	Hardened steel, micro-lap finish
Measuring spindle:	ø5 mm, spindle pitch 0,5 mm
Scale:	Thimble and sleeve satin chrome finish, ø13 mm
Mass:	65 g
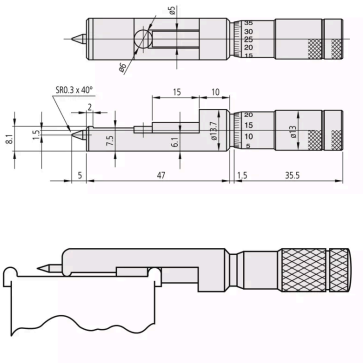
Dimensions