Inside Micrometer, Interchangeable Rods

Item number: 141-003

Images

Features

Digital/Analog:	Analog
Inch-Metric:	Metric
Range:	25 - 32 mm
Graduation:	0.01 mm
Head adjustment range:	7 mm
Measuring spindle:	Spindle pitch 0,5 mm with spindle lock
Measuring face:	Carbide
Delivered:	Micrometer head only
Mass:	20 g
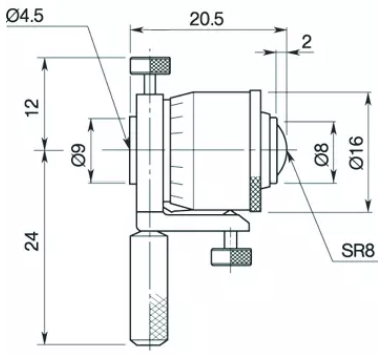
Dimensions