Mitutoyo

Tubular Inside Micrometer with Extension

Item number: 140-157

Images

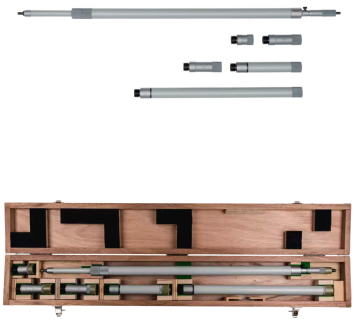

Description

This is a long range inside micrometer that offers you the following benefits:

- It has a long measuring range of up to 5000 mm
- Extension tube type design.
- Measuring surfaces in carbide are available, micro-lap finish

Features

Digital/Analog:	Analog
Inch-Metric:	Metric
Range:	1,000 - 2,000 mm
Measuring span:	50 mm
Graduation:	0.01 mm
Spindle feed error:	6 µm
Limit of error:	±(7+number of rods+max. measurement length/50) µm
Scale:	Thimble and sleeve satin chrome finish, ø21 mm
Measuring spindle:	Spindle pitch 0,5 mm
Measuring face:	Carbide
Extension rods:	5 (50, 100 (2 pcs.) 200, 500 mm)
Delivered:	Including box, spanner, extension rods (5 pcs.), micrometer head
Mass:	3700 g

Dimensions

Spare parts

Consumable spares:

Extension Rod 50mm, for Series 140

Art No. 04GZA394
Suggested retail price: **118.00 €***

Extension Rod 100mm, for Series 140

Art No. 04GZA396
Suggested retail price: **149.00 €***

Extension Rod 200mm, for Series 140

Art No. 04GZA398
Suggested retail price: **214.00 €***

Extension Rod 500mm, for Series 140

Art No. 04GZA400
Suggested retail price: **380.00 €***

Extension Rod 1000mm, for Series 140

Art No. 04GZA402
Suggested retail price: **529.00 €***