NH fuse-links gG 500 - 690VAC

with striker size 0, 1, 2, 3, 4

LOW VOLTAGE IEC FUSES

IEC NH FUSE-LINKS

The NH system is classified among plug-in fuse systems and is composed of:

- fuse-base (possibly including terminal covers and phase barriers)
- fuse-link with blade contact
- fuse-link replacement device (LV HRC fuse puller)

Since the design of this system cannot guarantee non-interchangeability of rated current it must be handled by a qualified professional.

Type “gG” NH fuse-links are full range breaking capacity fuse-links and are used to protect cables and equipment. They can interrupt any current surge, from the lowest fusing current up to their breaking capacity, and so can be used alone as protection. They also protect electrical devices and industrial set-ups from the electrodynamic effects of very high short-circuit currents.

TECHNICAL DATA OVERVIEW

Voltage Range AC	500 ... 690 VAC
Ampere Range (A)	32 ... 1250 A
Size per Standard	Sizes 0 to 4 - with striker
Speed/Characteristic	gG
I.R. AC	80 ... 120 kA
Body Material	ceramic
Contact Materials	copper, silver-plated

FEATURES & BENEFITS

- Dimensions according to DIN 43 620 Parts 1 to 4
- Lead free contact blades
- 0% cadmium

APPLICATIONS

- gG: General purpose cable and line protection

STANDARDS

- VDE 0636 Part 201
- IEC 60269-1 and -2

CE

©2024 Mersen. All rights reserved. Mersen reserves the right to change, adapt, limit or discontinue its products. Therefore the data provided herein are for information only and are not contractually binding. To ensure that Mersen provides the best solution to your needs, please contact and provide Mersen with all relevant technical specifications and conditions.

PRODUCT RANGE

NH0GG50V160P-2

Size 0 gG with striker

Catalog number	Item number	Rated voltage AC (IEC)	Rated current I_n	Rated breaking capacity AC	Power dissipation at I_n	Package	Weight
NH0GG69V32P-2	P213637	690 V	32 A	80 kA	3.7 W	3	0.28 kg
NH0GG69V35P-2	S214146	690 V	35 A	80 kA	4 W	3	0.28 kg
NH0GG69V40P-2	W214655	690 V	40 A	80 kA	4.5 W	3	0.28 kg
NH0GG69V50P-2	B215166	690 V	50 A	80 kA	5.2 W	3	0.28 kg
NH0GG69V63P-2	D215674	690 V	63 A	80 kA	6.2 W	3	0.28 kg
NH0GG69V80P-2	J216185	690 V	80 A	80 kA	7.5 W	3	0.28 kg
NH0GG69V100P-2	H216690	690 V	100 A	80 kA	8.5 W	3	0.28 kg
NH0GG50V125P-2	V217207	500 V	125 A	120 kA	10.7 W	3	0.28 kg
NH0GG50V160P-2	A217718	500 V	160 A	120 kA	13.5 W	3	0.28 kg
NH0GG50V200P-2	K218233	500 V	200 A	120 kA	15 W	3	0.28 kg

Size 1 gG with striker

Catalog number	Item number	Rated voltage AC (IEC)	Rated current I_n	Rated breaking capacity AC	Power dissipation at I_n	Package	Weight
NH1GG69V80P-2	Y218751	690 V	80 A	80 kA	6.9 W	3	0.35 kg
NH1GG69V100P-2	M219270	690 V	100 A	80 kA	8.1 W	3	0.35 kg
NH1GG69V125P-2	P219801	690 V	125 A	80 kA	9.6 W	3	0.35 kg
NH1GG69V160P-2	Z222478	690 V	160 A	80 kA	11.9 W	3	0.35 kg
NH1GG69V200P-2	R223000	690 V	200 A	80 kA	14.9 W	3	0.35 kg
NH1GG50V224P-2	Y200788	500 V	224 A	120 kA	16.7 W	3	0.35 kg
NH1GG50V250P-2	Q201333	500 V	250 A	120 kA	18.7 W	3	0.35 kg

NH2GG50V400P-2

Size 2 gG with striker

Catalog number	Item number	Rated voltage AC (IEC)	Rated current I_n	Rated breaking capacity AC	Power dissipation at I_n	Package	Weight
NH2GG69V125P-2	W212102	690 V	125 A	80 kA	9.5 W	3	0.56 kg
NH2GG69V160P-2	L212622	690 V	160 A	80 kA	11.5 W	3	0.56 kg
NH2GG69V200P-2	Y213139	690 V	200 A	80 kA	14.5 W	3	0.56 kg
NH2GG69V224P-2	Q213638	690 V	224 A	80 kA	16 W	3	0.56 kg
NH2GG69V250P-2	T214147	690 V	250 A	80 kA	17.5 W	3	0.56 kg
NH2GG69V315P-2	X214656	690 V	315 A	80 kA	23 W	3	0.56 kg
NH2GG50V355P-2	E215675	500 V	355 A	120 kA	25 W	3	0.56 kg
NH2GG50V400P-2	K216186	500 V	400 A	120 kA	29 W	3	0.56 kg
NH2GG50V500P-2	W217208	500 V	500 A	120 kA	39 W	3	0.56 kg

NH3GG50V630P-2

Size 3 gG with striker

Catalog number	Item number	Rated voltage AC (IEC)	Rated current I_n	Rated breaking capacity AC	Power dissipation at I_n	Package	Weight
NH3GG69V315P-2	B217719	690 V	315 A	80 kA	23 W	3	0.87 kg
NH3GG69V355P-2	L218234	690 V	355 A	80 kA	25 W	3	0.87 kg
NH3GG69V400P-2	Z218752	690 V	400 A	80 kA	29 W	3	0.87 kg
NH3GG50V500P-2	Z1069867	500 V	500 A	120 kA	39 W	3	0.87 kg
NH3GG50V630P-2	Q219802	500 V	630 A	120 kA	47 W	3	0.87 kg

©2024 Mersen. All rights reserved. Mersen reserves the right to change, adapt, limit or discontinue its products. Therefore the data provided herein are for information only and are not contractually binding. To ensure that Mersen provides the best solution to your needs, please contact and provide Mersen with all relevant technical specifications and conditions.

PRODUCT RANGE

Size 4 gG with striker

Catalog number	Item number	Rated voltage AC (IEC)	Rated current I_n	Rated breaking capacity AC	Power dissipation at I_n	Package	Weight
NH4GG69V500P-2	S1000079	690 V	500 A	80 kA	40 W	1	2.2 kg
NH4GG69V630P-2	T1000080	690 V	630 A	80 kA	53 W	1	2.2 kg
NH4GG69V800P-2	V1000081	690 V	800 A	80 kA	68 W	1	2.2 kg
NH4GG50V1000P-2	W1000082	500 V	1000 A	120 kA	65 W	1	2.2 kg
NH4GG50V1250P-2	X1000083	500 V	1250 A	120 kA	61 W	1	2.2 kg

TECHNICAL DATA

	Size 0	Size 1	Size 2	Size 3	Size 4
Size	0	1	2	3	4
Rated current	32 ... 200 A	80 ... 355 A	125 ... 500 A	315 ... 630 A	500 ... 1250 A
Rated voltage AC	500 ... 690 V	500 ... 690 V	500 ... 690 V	500 ... 690 V	500 ... 690 V
Indication System	with striker	with striker	with striker	with striker	with striker
Package	3	3	3	3	1

©2024 Mersen. All rights reserved. Mersen reserves the right to change, adapt, limit or discontinue its products. Therefore the data provided herein are for information only and are not contractually binding. To ensure that Mersen provides the best solution to your needs, please contact and provide Mersen with all relevant technical specifications and conditions.

TIME CURRENT CHARACTERISTIC CURVES

Size 0, 690V gG

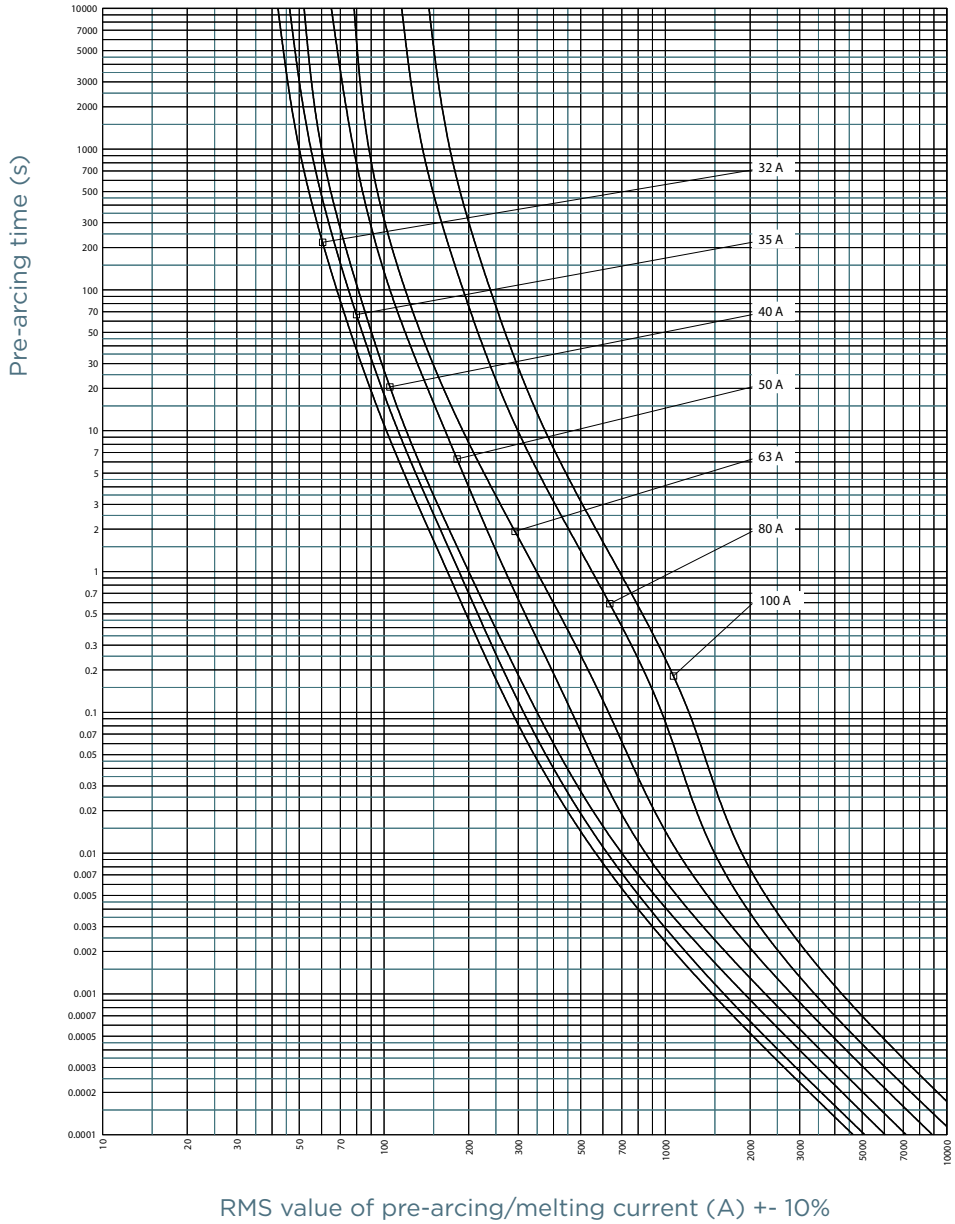

©2024 Mersen. All rights reserved. Mersen reserves the right to change, adapt, limit or discontinue its products. Therefore the data provided herein are for information only and are not contractually binding. To ensure that Mersen provides the best solution to your needs, please contact and provide Mersen with all relevant technical specifications and conditions.

TIME CURRENT CHARACTERISTIC CURVES

Size 0, 500V gG

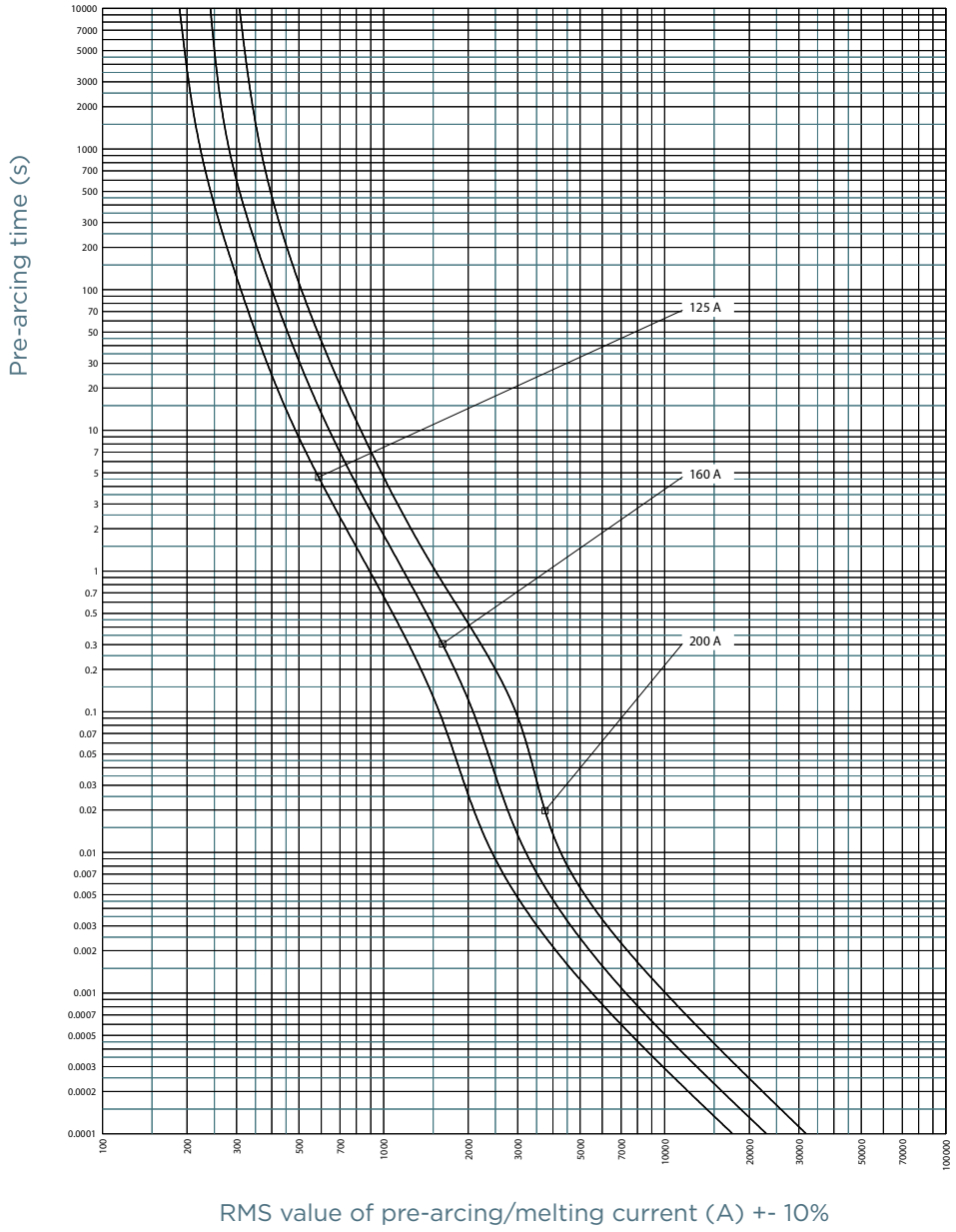

©2024 Mersen. All rights reserved. Mersen reserves the right to change, adapt, limit or discontinue its products. Therefore the data provided herein are for information only and are not contractually binding. To ensure that Mersen provides the best solution to your needs, please contact and provide Mersen with all relevant technical specifications and conditions.

TIME CURRENT CHARACTERISTIC CURVES

Size 1, 690V gG

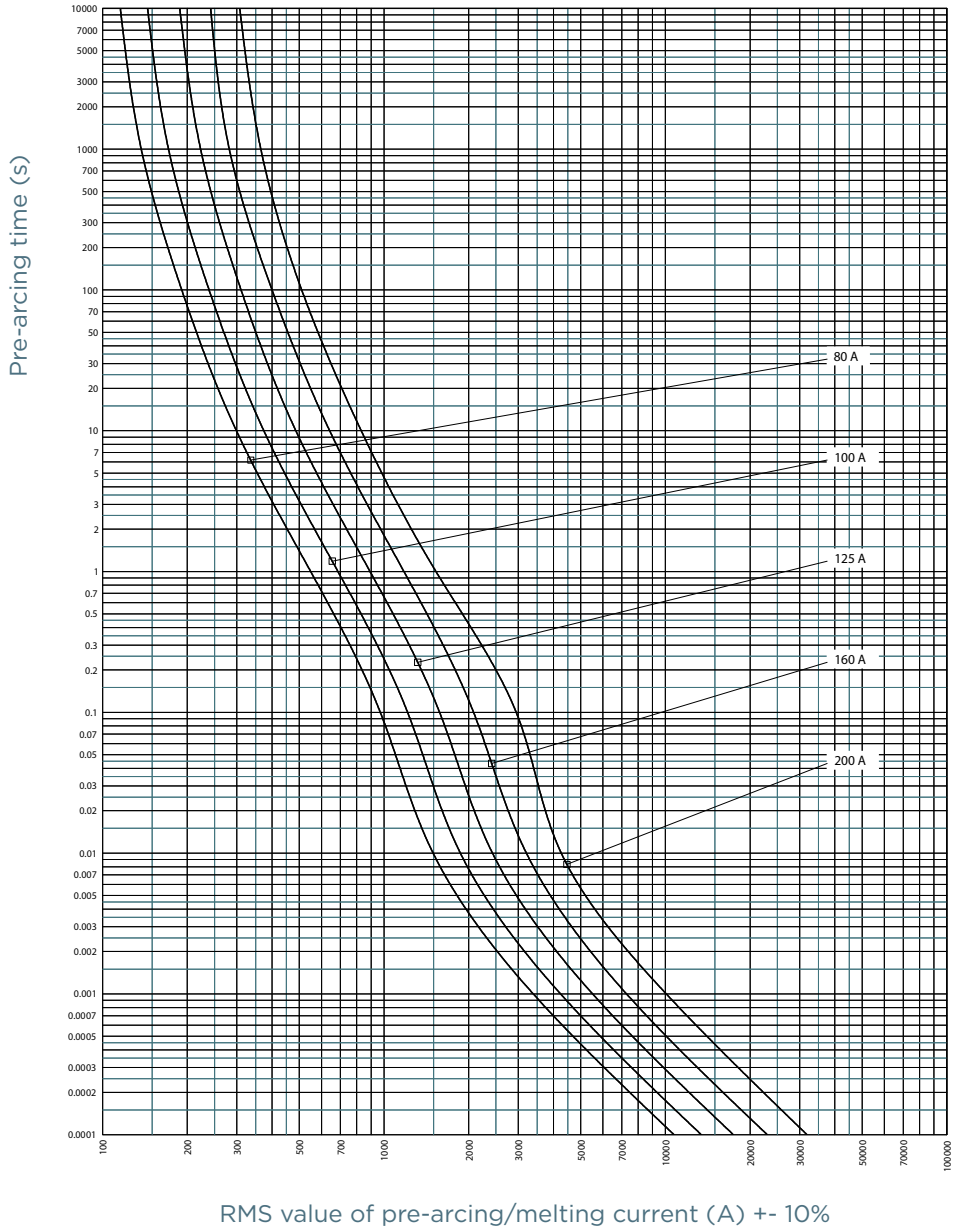

©2024 Mersen. All rights reserved. Mersen reserves the right to change, adapt, limit or discontinue its products. Therefore the data provided herein are for information only and are not contractually binding. To ensure that Mersen provides the best solution to your needs, please contact and provide Mersen with all relevant technical specifications and conditions.

TIME CURRENT CHARACTERISTIC CURVES

Size 1, 500V gG

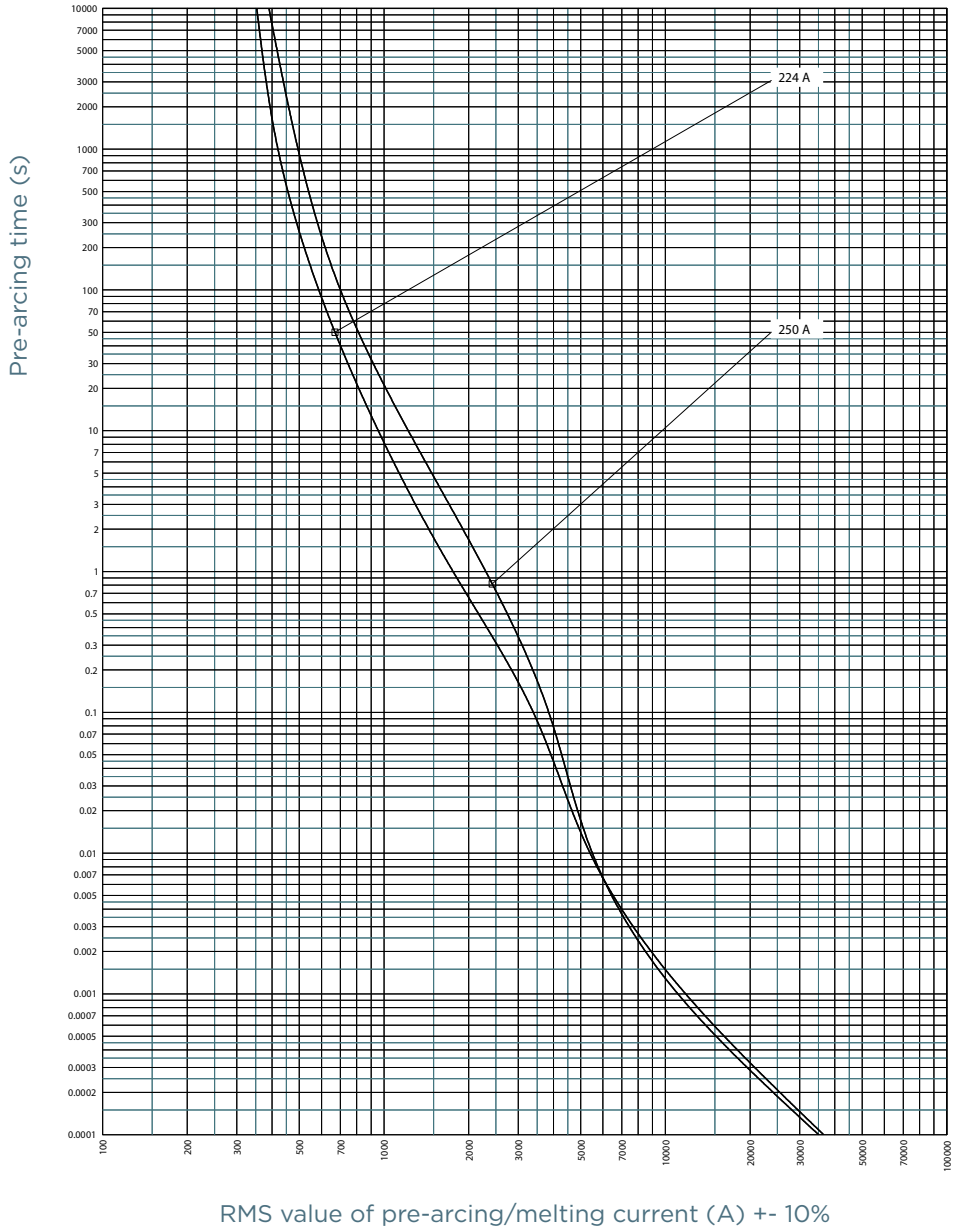

©2024 Mersen. All rights reserved. Mersen reserves the right to change, adapt, limit or discontinue its products. Therefore the data provided herein are for information only and are not contractually binding. To ensure that Mersen provides the best solution to your needs, please contact and provide Mersen with all relevant technical specifications and conditions.

TIME CURRENT CHARACTERISTIC CURVES

Size 2, 690V gG

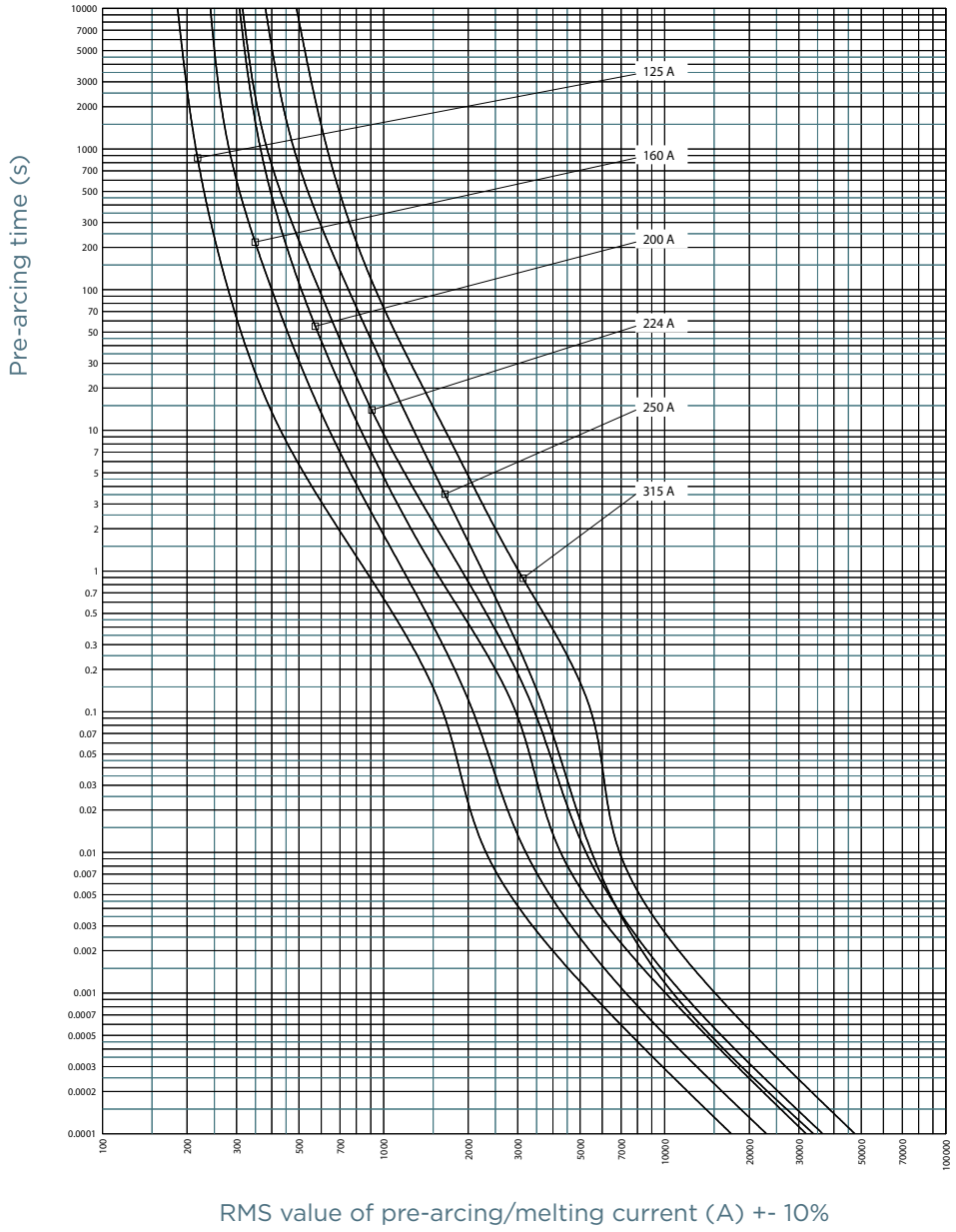

©2024 Mersen. All rights reserved. Mersen reserves the right to change, adapt, limit or discontinue its products. Therefore the data provided herein are for information only and are not contractually binding. To ensure that Mersen provides the best solution to your needs, please contact and provide Mersen with all relevant technical specifications and conditions.

TIME CURRENT CHARACTERISTIC CURVES

Size 2, 500V gG

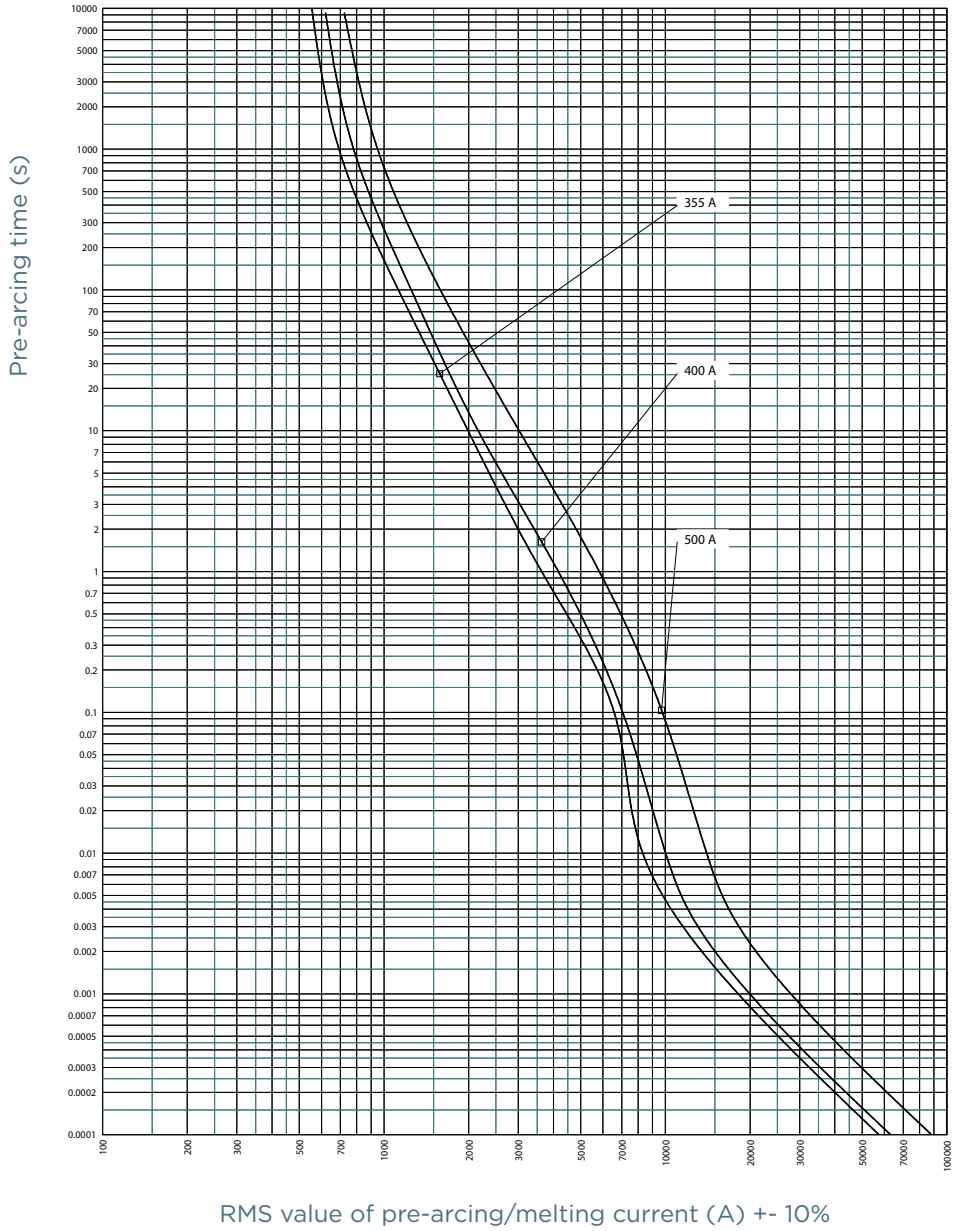

©2024 Mersen. All rights reserved. Mersen reserves the right to change, adapt, limit or discontinue its products. Therefore the data provided herein are for information only and are not contractually binding. To ensure that Mersen provides the best solution to your needs, please contact and provide Mersen with all relevant technical specifications and conditions.

TIME CURRENT CHARACTERISTIC CURVES

Size 3, 690V gG

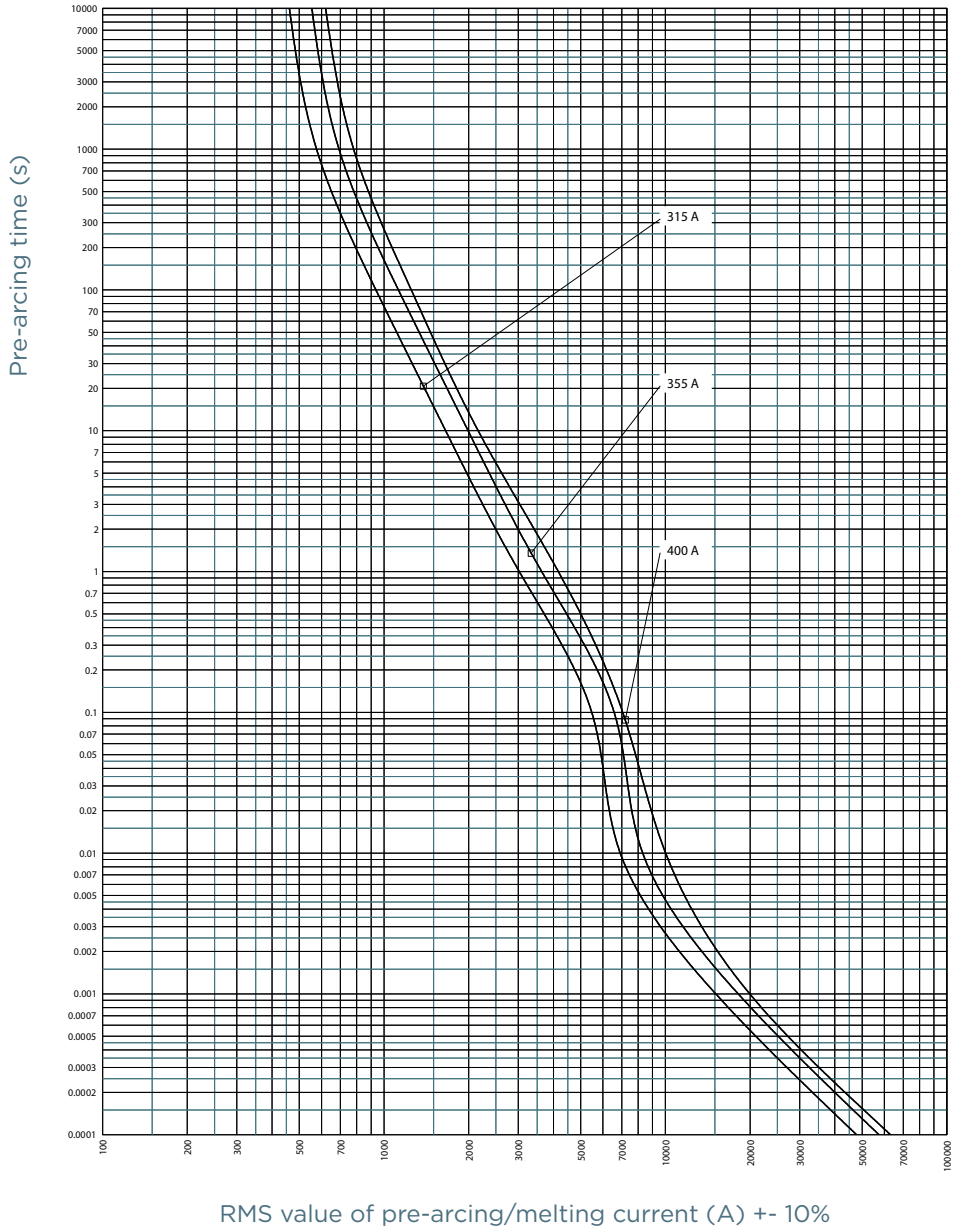

©2024 Mersen. All rights reserved. Mersen reserves the right to change, adapt, limit or discontinue its products. Therefore the data provided herein are for information only and are not contractually binding. To ensure that Mersen provides the best solution to your needs, please contact and provide Mersen with all relevant technical specifications and conditions.

TIME CURRENT CHARACTERISTIC CURVES

Size 3, 500V gG

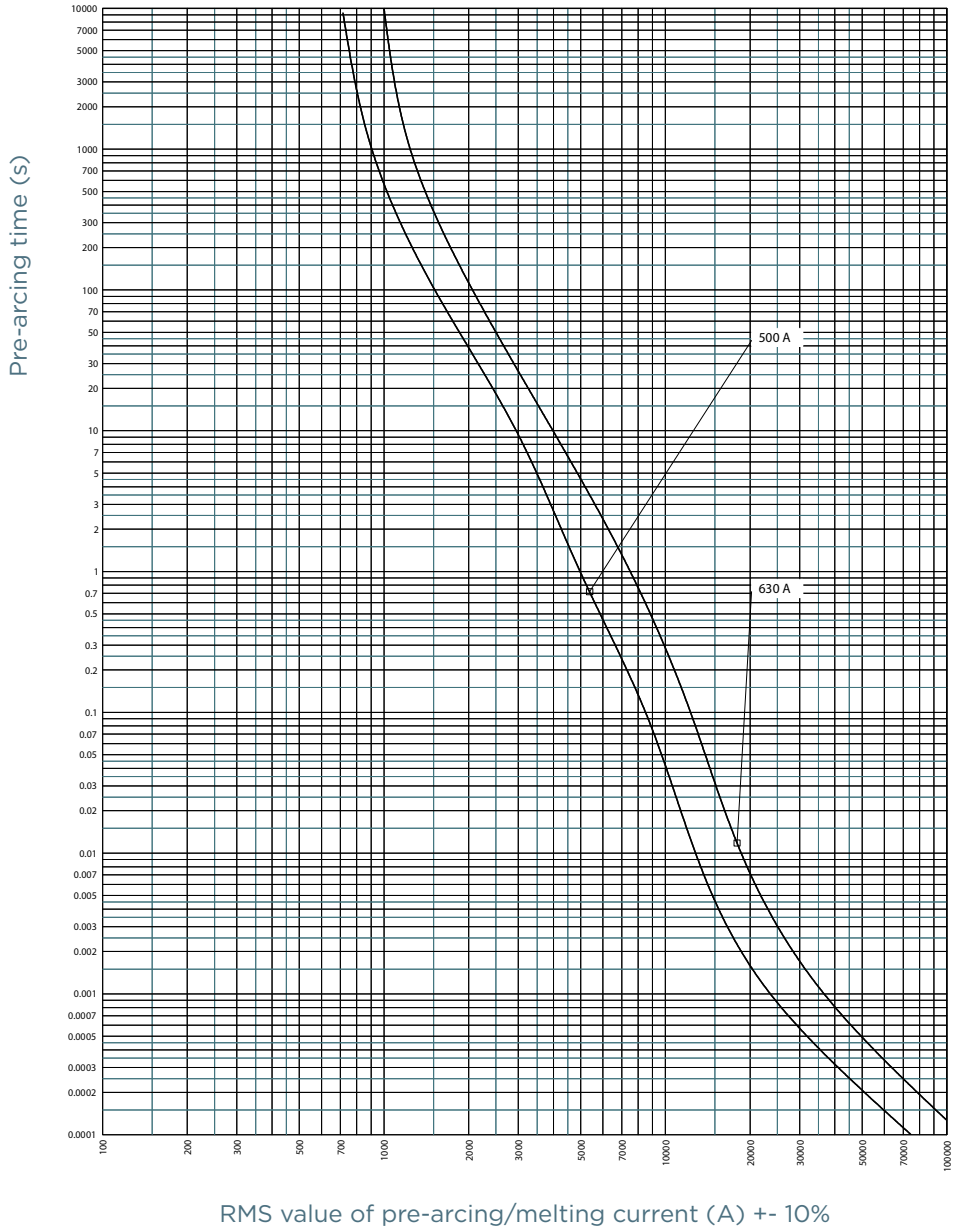

©2024 Mersen. All rights reserved. Mersen reserves the right to change, adapt, limit or discontinue its products. Therefore the data provided herein are for information only and are not contractually binding. To ensure that Mersen provides the best solution to your needs, please contact and provide Mersen with all relevant technical specifications and conditions.

TIME CURRENT CHARACTERISTIC CURVES

Size 4, 690V gG

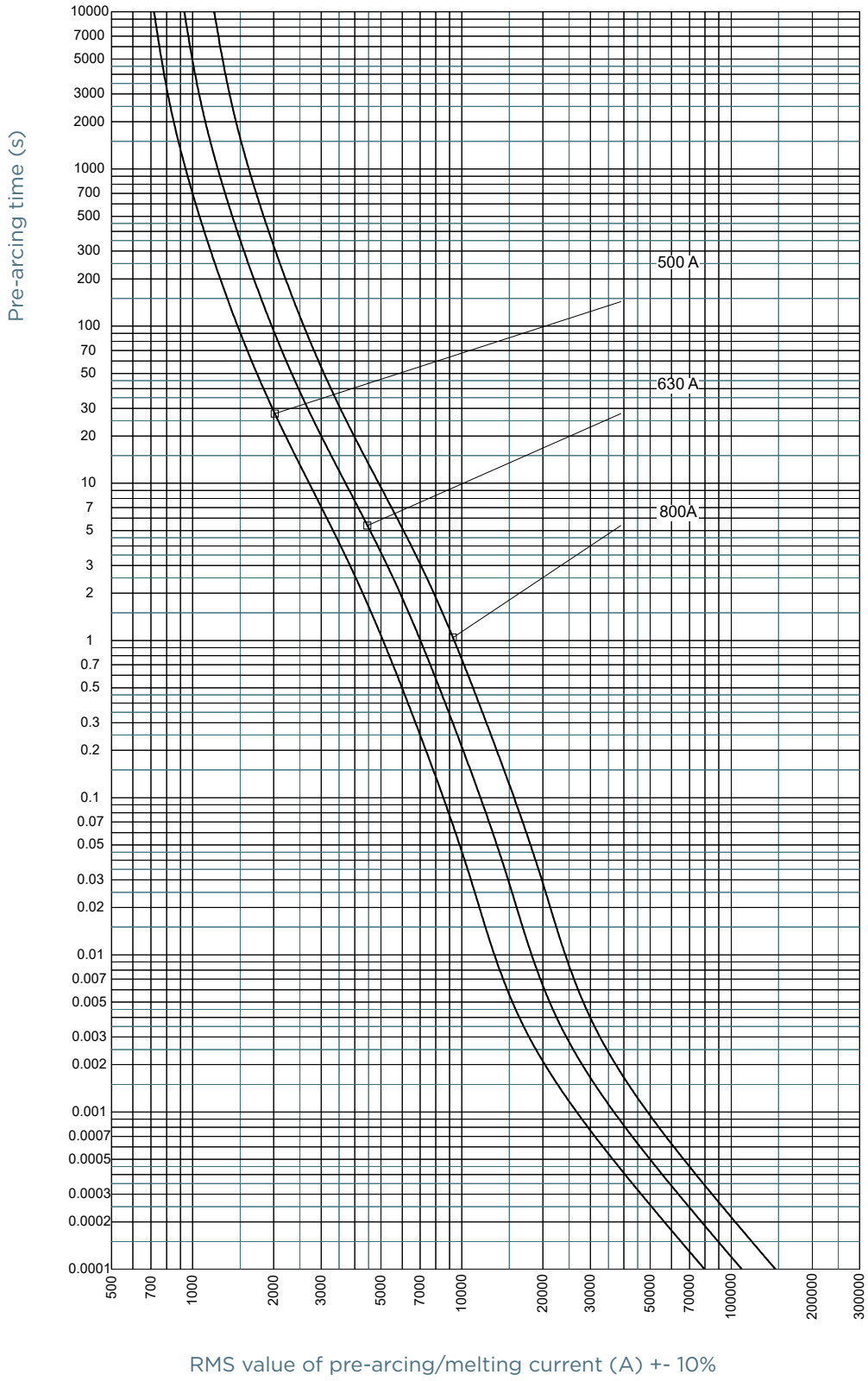

©2024 Mersen. All rights reserved. Mersen reserves the right to change, adapt, limit or discontinue its products. Therefore the data provided herein are for information only and are not contractually binding. To ensure that Mersen provides the best solution to your needs, please contact and provide Mersen with all relevant technical specifications and conditions.

TIME CURRENT CHARACTERISTIC CURVES

Size 4, 500V gG

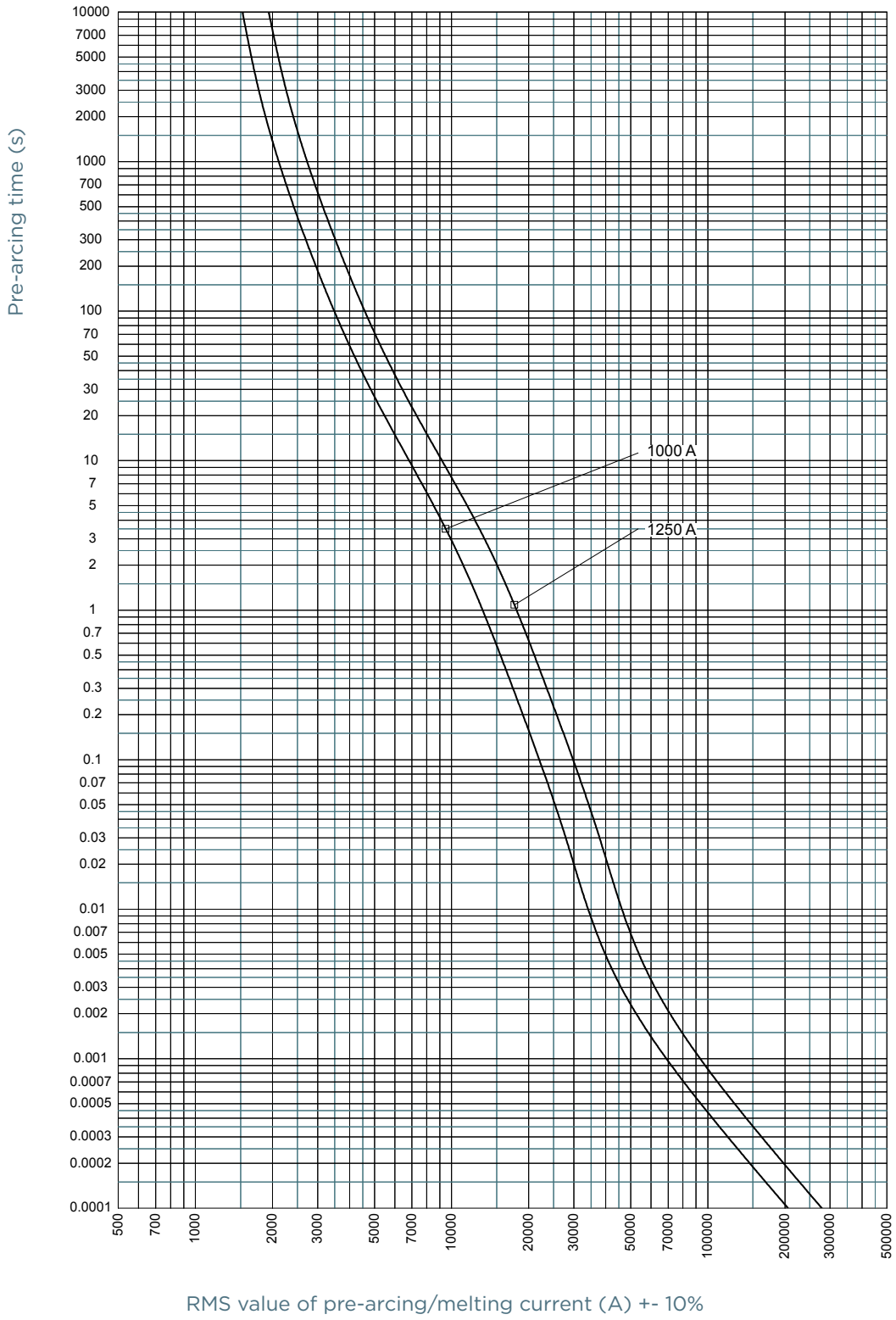

©2024 Mersen. All rights reserved. Mersen reserves the right to change, adapt, limit or discontinue its products. Therefore the data provided herein are for information only and are not contractually binding. To ensure that Mersen provides the best solution to your needs, please contact and provide Mersen with all relevant technical specifications and conditions.

CUT-OFF CURRENT CHARACTERISTIC

Size 0, 690V gG

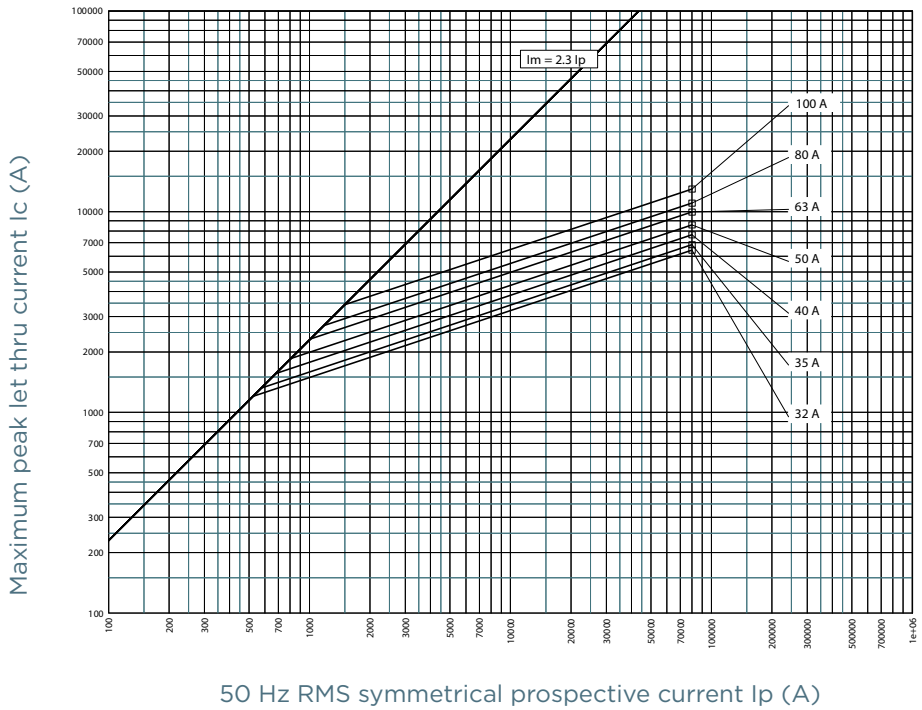

Size 0, 500V gG

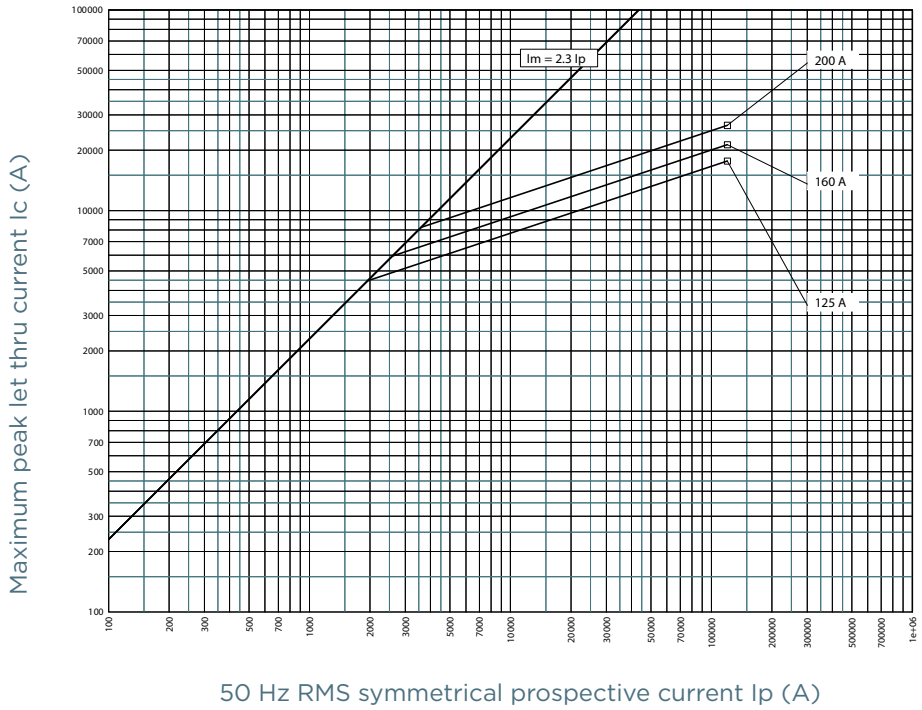

©2024 Mersen. All rights reserved. Mersen reserves the right to change, adapt, limit or discontinue its products. Therefore the data provided herein are for information only and are not contractually binding. To ensure that Mersen provides the best solution to your needs, please contact and provide Mersen with all relevant technical specifications and conditions.

CUT-OFF CURRENT CHARACTERISTIC

Size 1, 690V gG

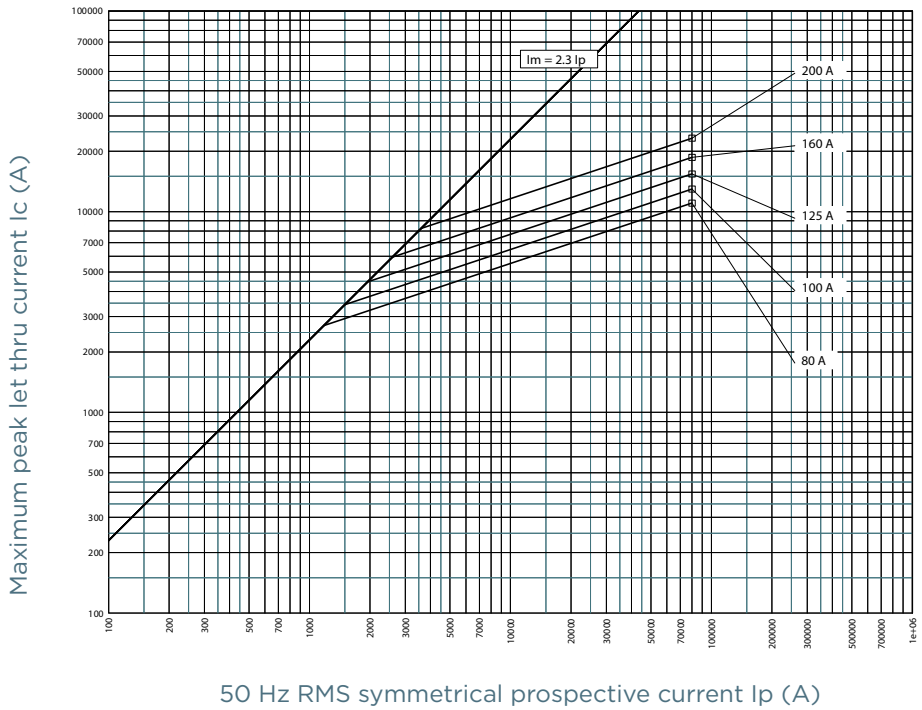

Size 1, 500V gG

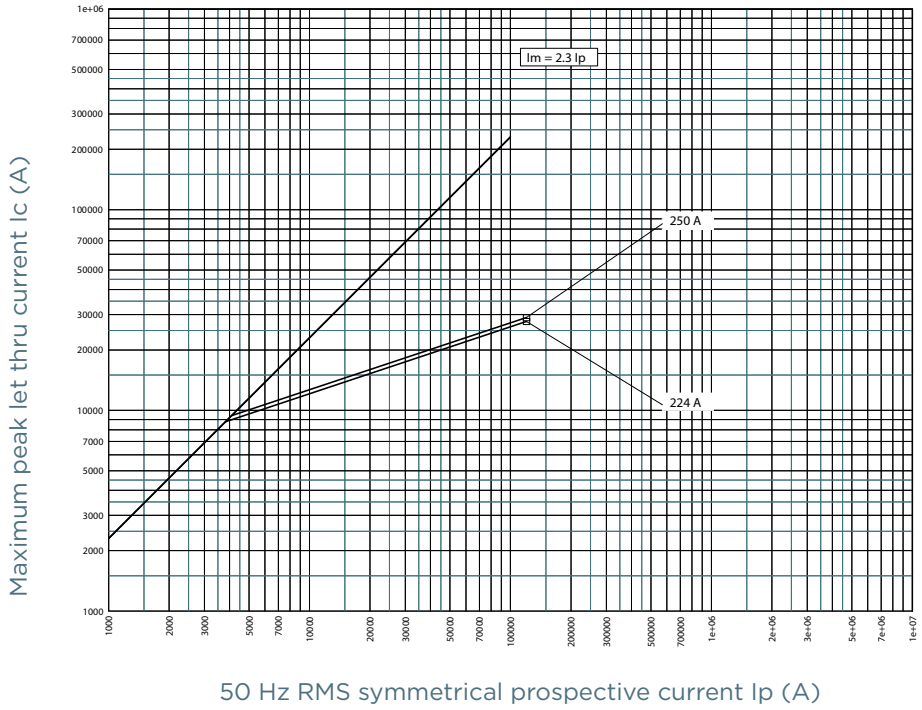

©2024 Mersen. All rights reserved. Mersen reserves the right to change, adapt, limit or discontinue its products. Therefore the data provided herein are for information only and are not contractually binding. To ensure that Mersen provides the best solution to your needs, please contact and provide Mersen with all relevant technical specifications and conditions.

CUT-OFF CURRENT CHARACTERISTIC

Size 2, 690V gG

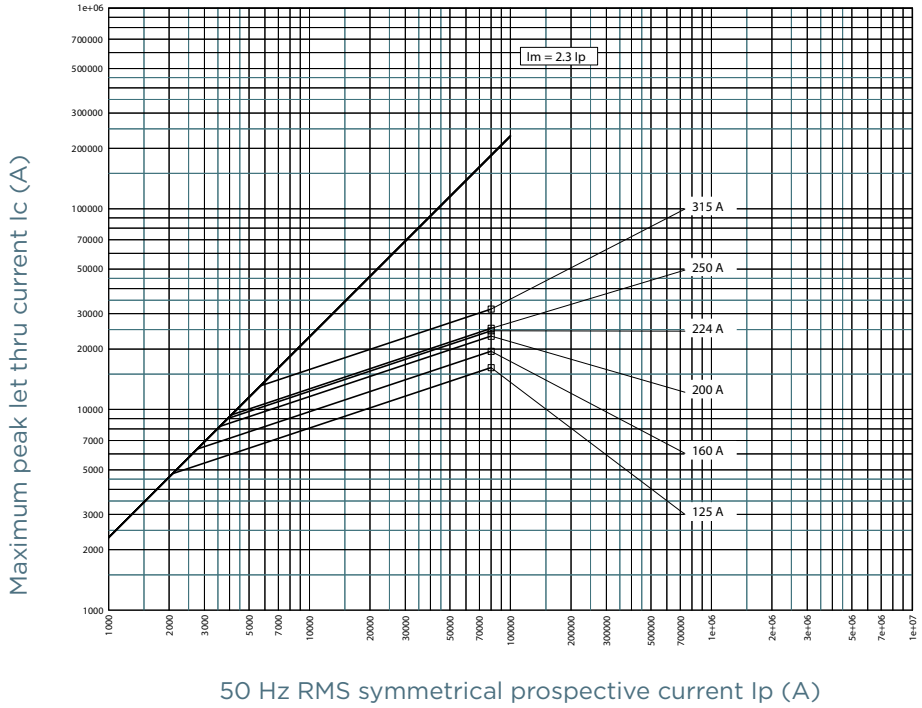

Size 2, 500V gG

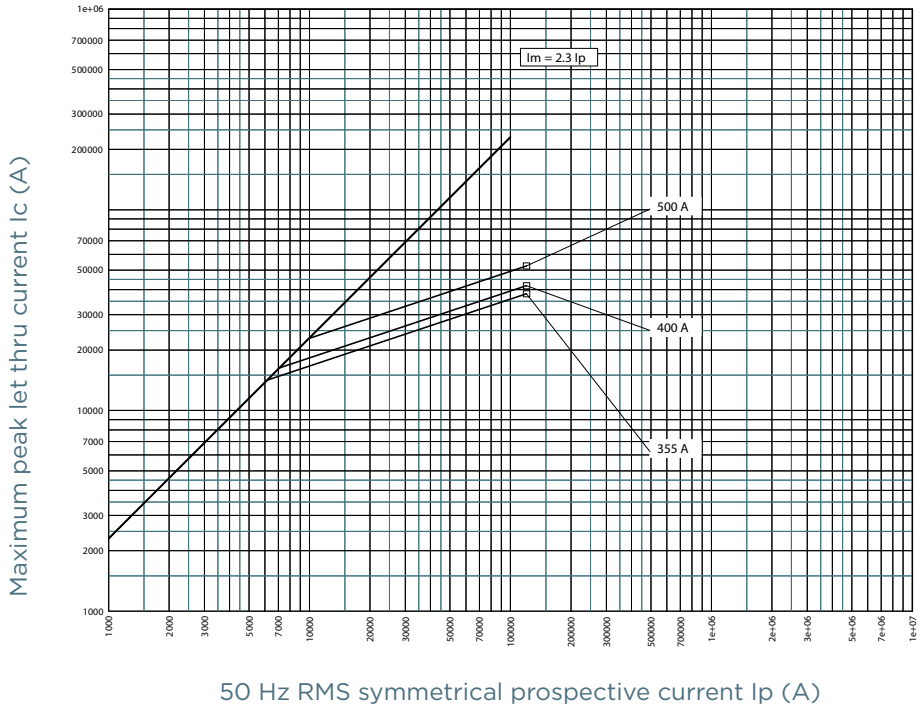

©2024 Mersen. All rights reserved. Mersen reserves the right to change, adapt, limit or discontinue its products. Therefore the data provided herein are for information only and are not contractually binding. To ensure that Mersen provides the best solution to your needs, please contact and provide Mersen with all relevant technical specifications and conditions.

CUT-OFF CURRENT CHARACTERISTIC

Size 3, 690V gG

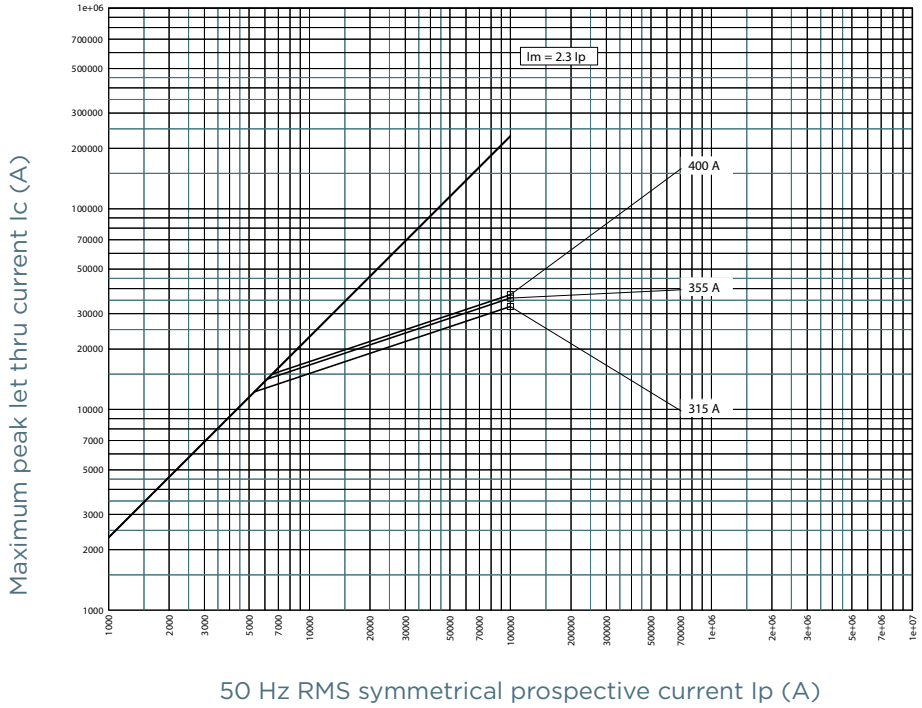

Size 3, 500V gG

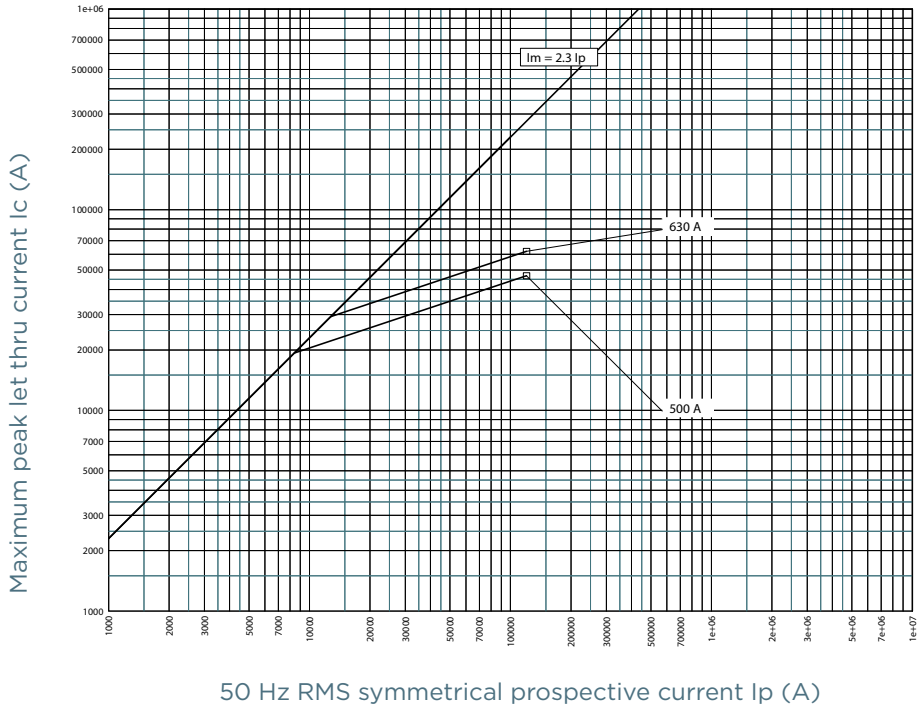

©2024 Mersen. All rights reserved. Mersen reserves the right to change, adapt, limit or discontinue its products. Therefore the data provided herein are for information only and are not contractually binding. To ensure that Mersen provides the best solution to your needs, please contact and provide Mersen with all relevant technical specifications and conditions.

CUT-OFF CURRENT CHARACTERISTIC

Size 4, 690V gG

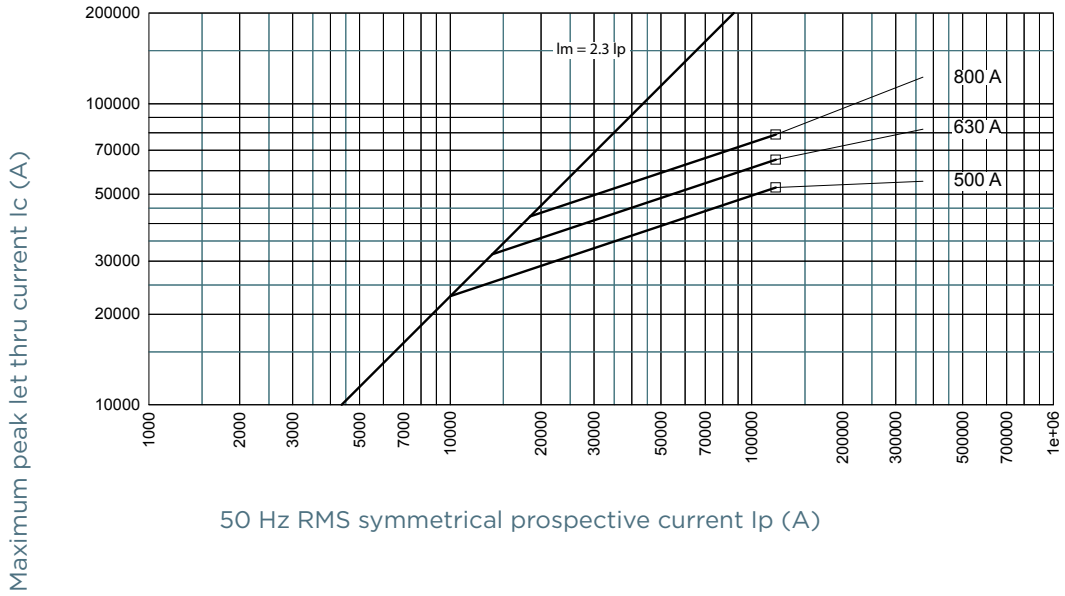

Size 4, 500V gG

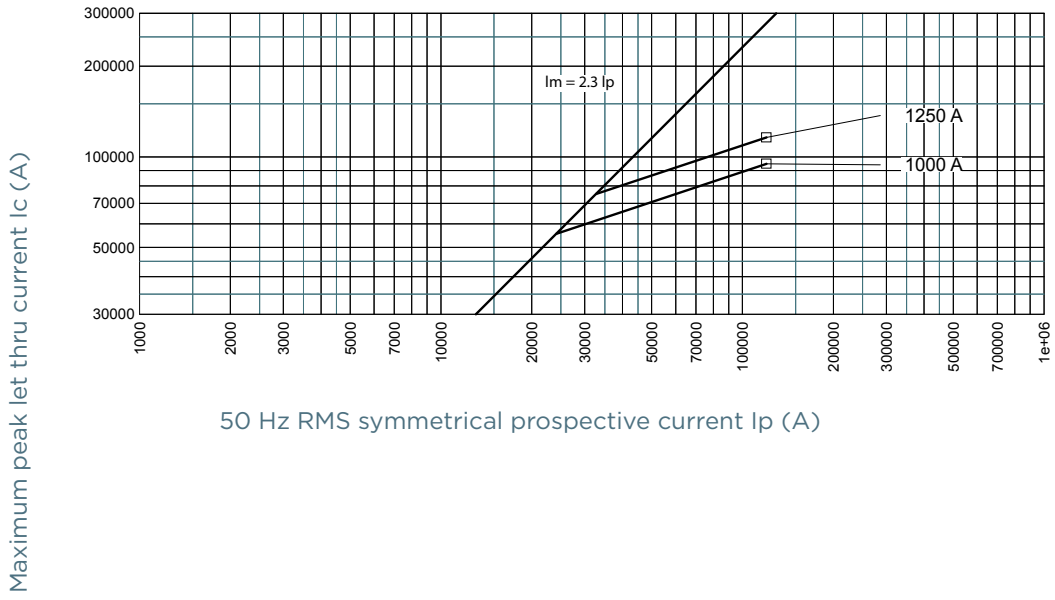

©2024 Mersen. All rights reserved. Mersen reserves the right to change, adapt, limit or discontinue its products. Therefore the data provided herein are for information only and are not contractually binding. To ensure that Mersen provides the best solution to your needs, please contact and provide Mersen with all relevant technical specifications and conditions.

PRE-ARCING AND OPERATING I²T CHARACTERISTICS

Size 0, 690V gG

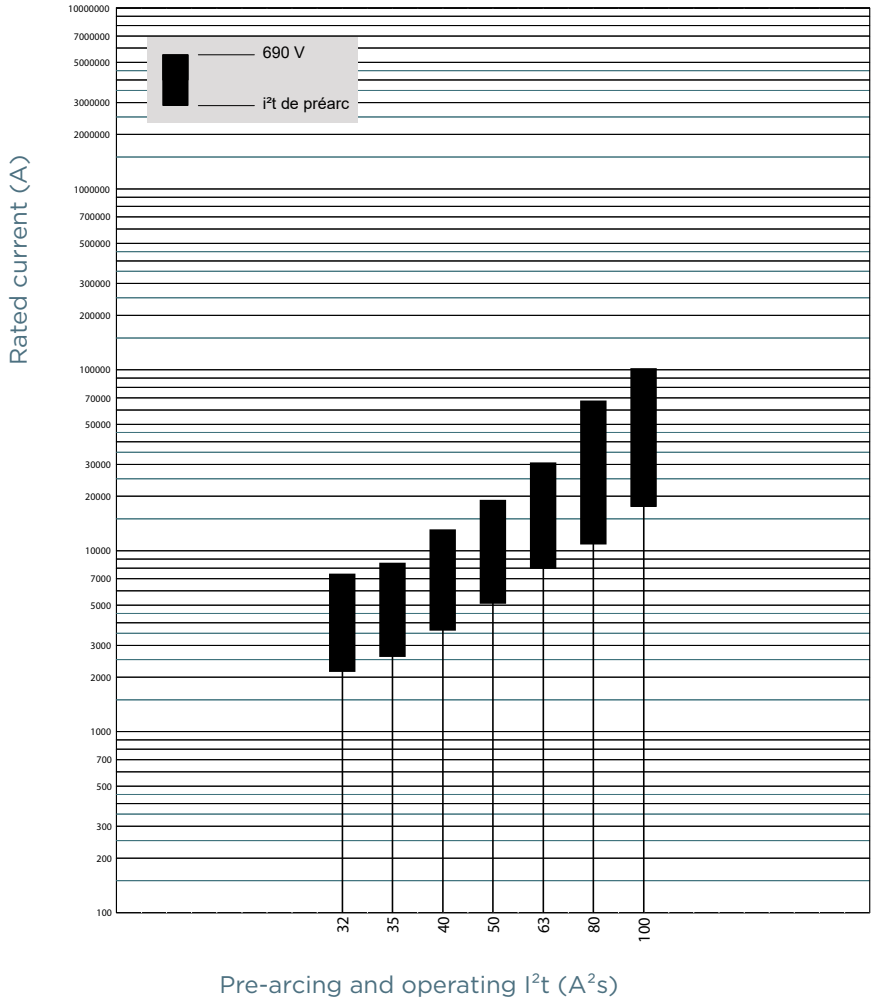

©2024 Mersen. All rights reserved. Mersen reserves the right to change, adapt, limit or discontinue its products. Therefore the data provided herein are for information only and are not contractually binding. To ensure that Mersen provides the best solution to your needs, please contact and provide Mersen with all relevant technical specifications and conditions.

PRE-ARCING AND OPERATING I²T CHARACTERISTICS

Size 0, 500V gG

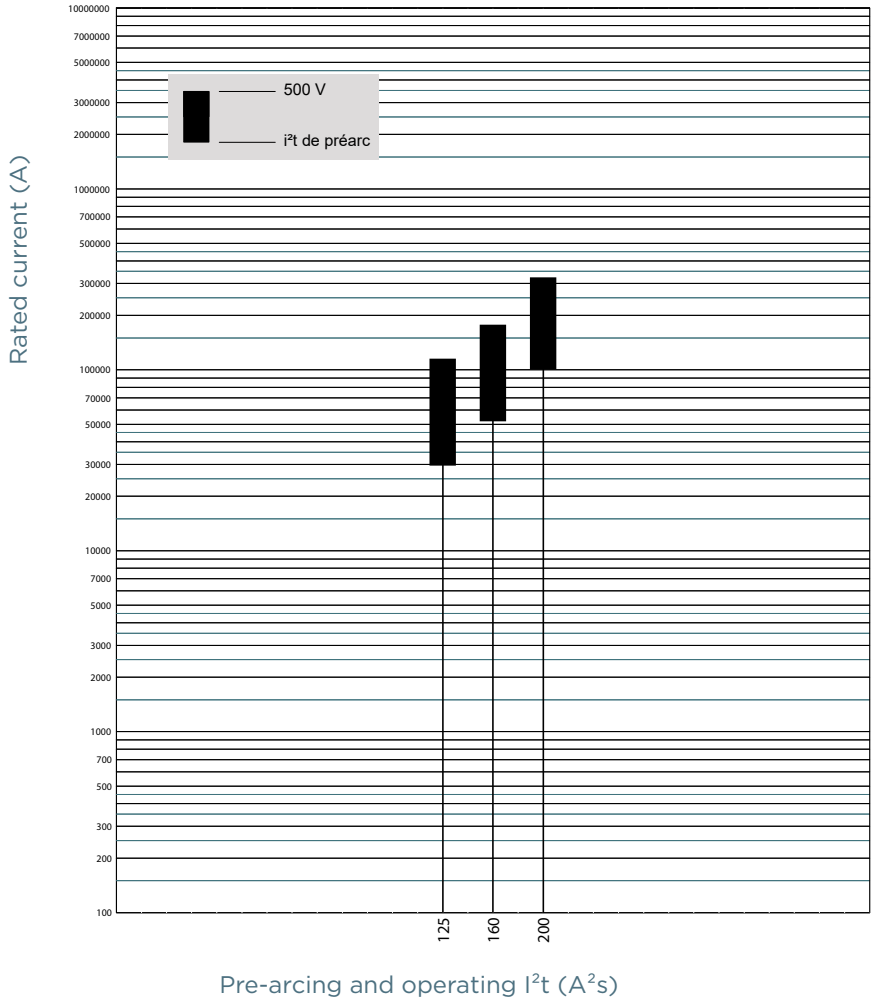

©2024 Mersen. All rights reserved. Mersen reserves the right to change, adapt, limit or discontinue its products. Therefore the data provided herein are for information only and are not contractually binding. To ensure that Mersen provides the best solution to your needs, please contact and provide Mersen with all relevant technical specifications and conditions.

PRE-ARCING AND OPERATING I²T CHARACTERISTICS

Size 1, 690V gG

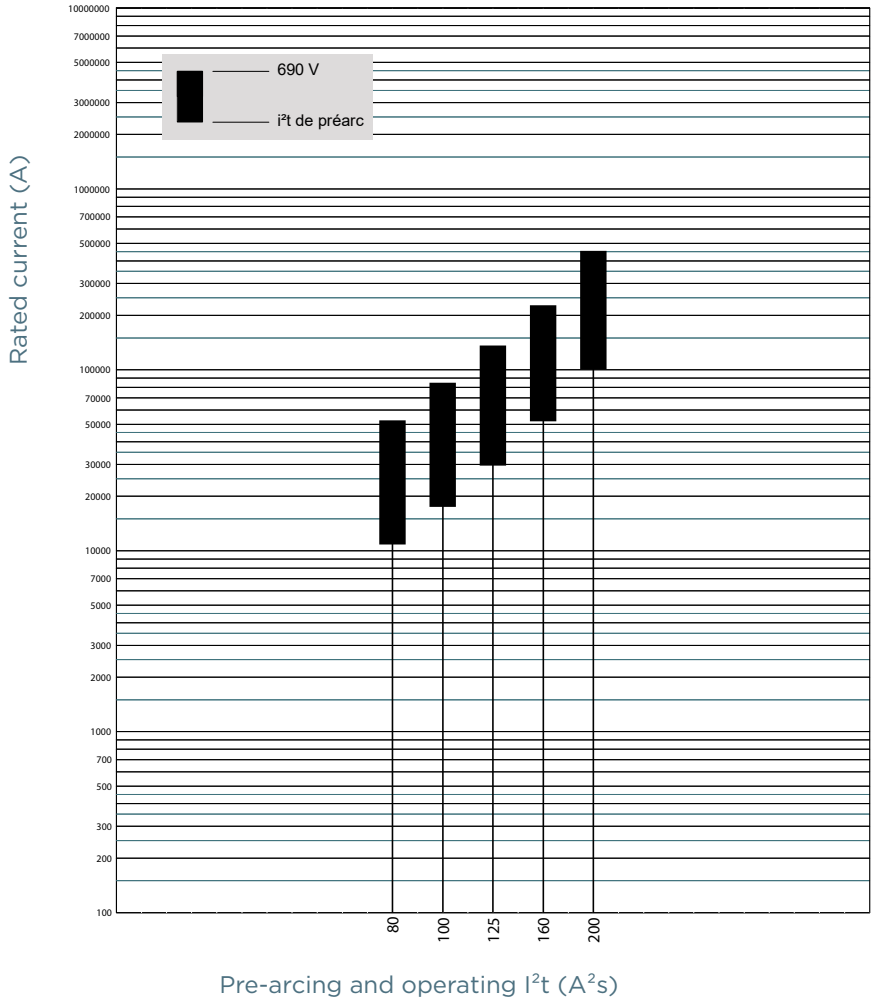

©2024 Mersen. All rights reserved. Mersen reserves the right to change, adapt, limit or discontinue its products. Therefore the data provided herein are for information only and are not contractually binding. To ensure that Mersen provides the best solution to your needs, please contact and provide Mersen with all relevant technical specifications and conditions.

PRE-ARCING AND OPERATING I²T CHARACTERISTICS

Size 1, 500V gG

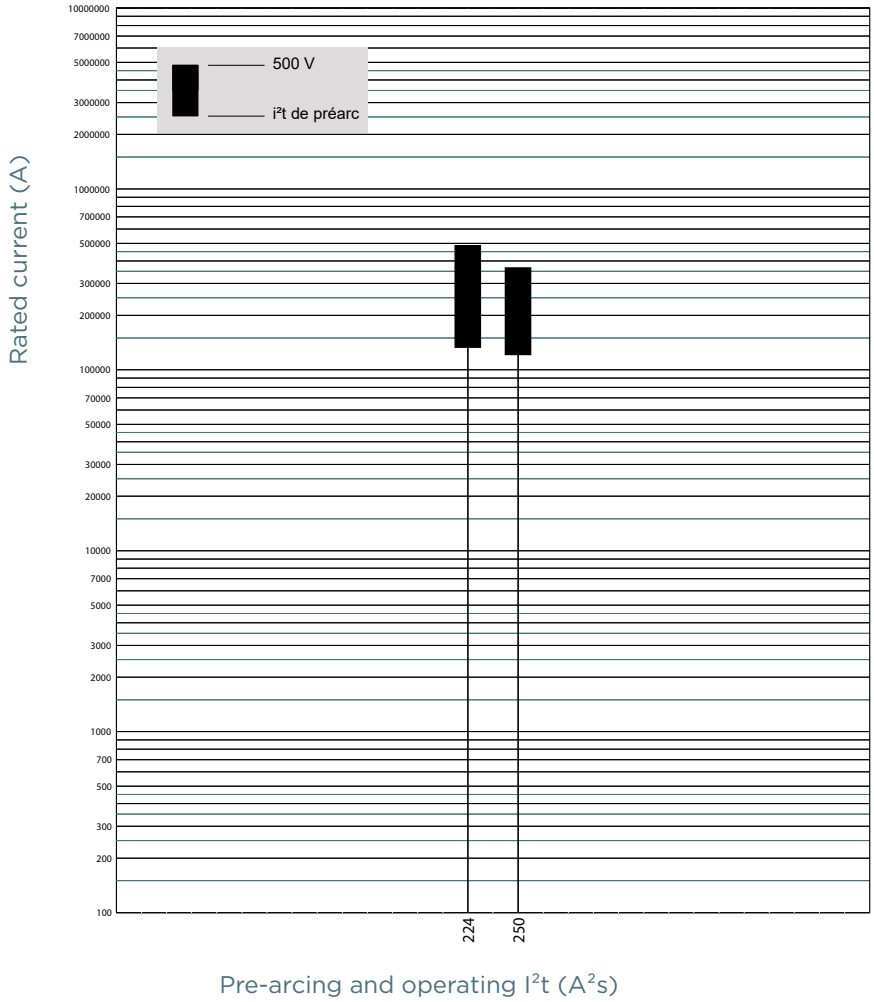

©2024 Mersen. All rights reserved. Mersen reserves the right to change, adapt, limit or discontinue its products. Therefore the data provided herein are for information only and are not contractually binding. To ensure that Mersen provides the best solution to your needs, please contact and provide Mersen with all relevant technical specifications and conditions.

PRE-ARCING AND OPERATING I²T CHARACTERISTICS

Size 2, 690V gG

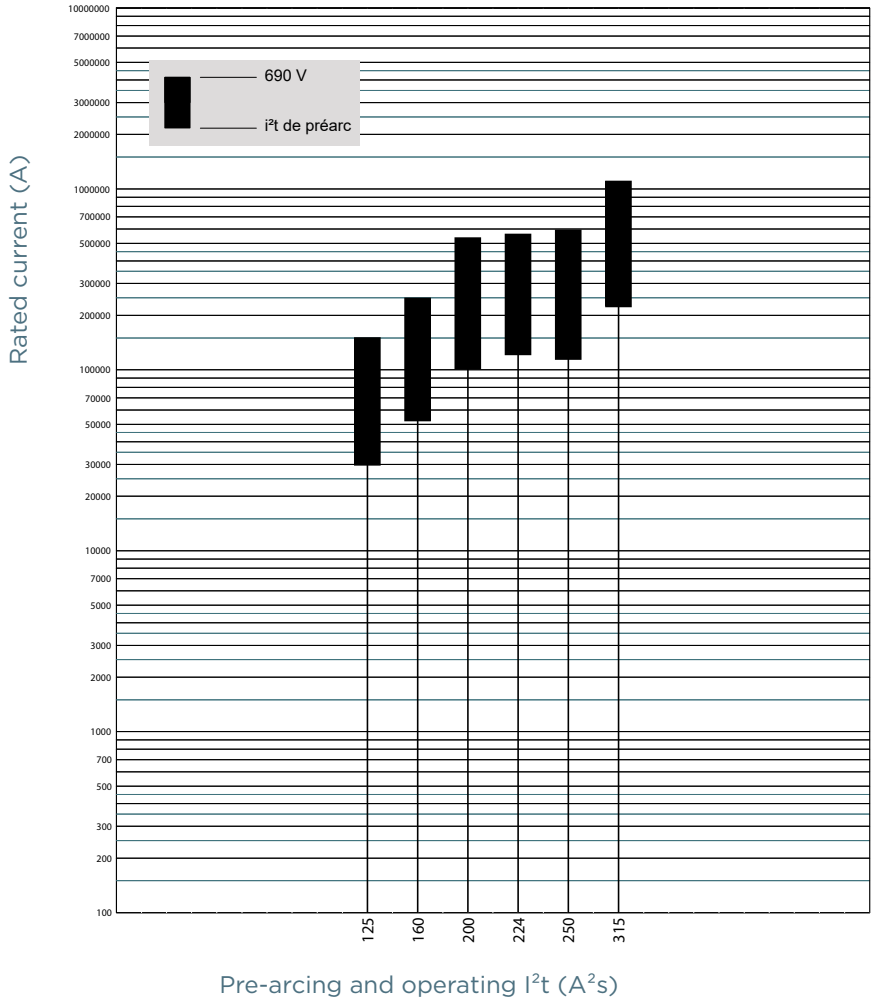

©2024 Mersen. All rights reserved. Mersen reserves the right to change, adapt, limit or discontinue its products. Therefore the data provided herein are for information only and are not contractually binding. To ensure that Mersen provides the best solution to your needs, please contact and provide Mersen with all relevant technical specifications and conditions.

PRE-ARCING AND OPERATING I²T CHARACTERISTICS

Size 2, 500V gG

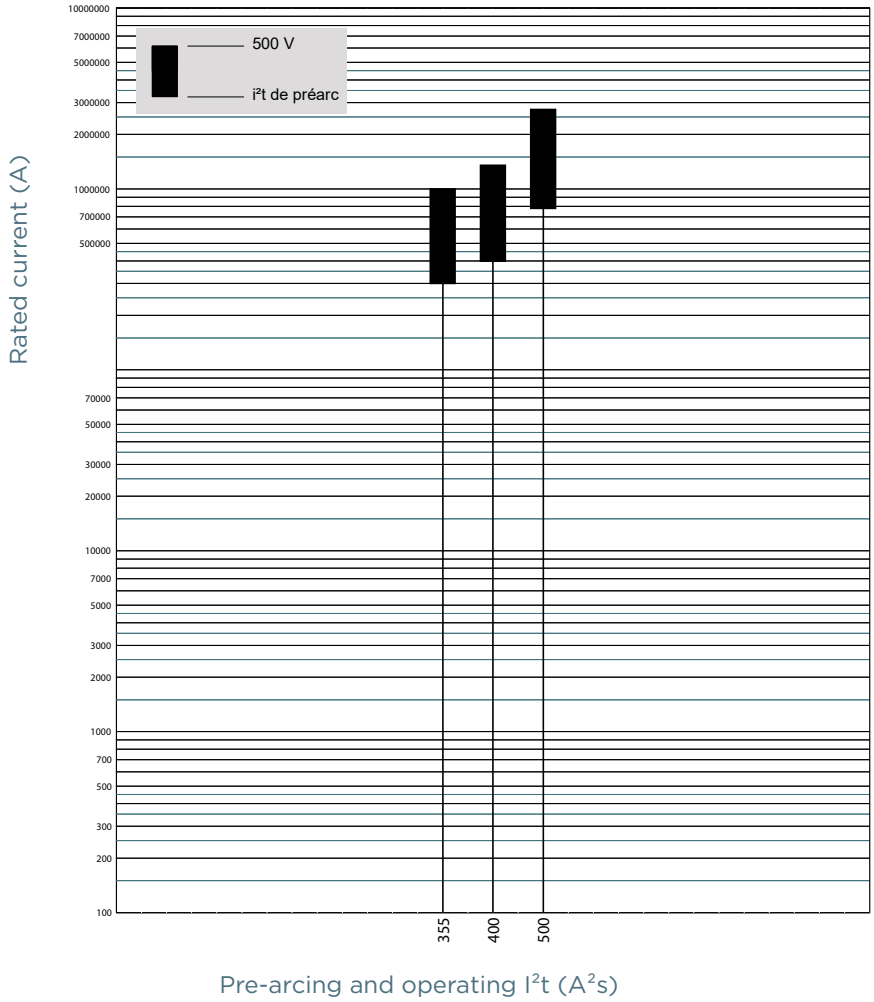

©2024 Mersen. All rights reserved. Mersen reserves the right to change, adapt, limit or discontinue its products. Therefore the data provided herein are for information only and are not contractually binding. To ensure that Mersen provides the best solution to your needs, please contact and provide Mersen with all relevant technical specifications and conditions.

PRE-ARCING AND OPERATING I²T CHARACTERISTICS

Size 3, 690V gG

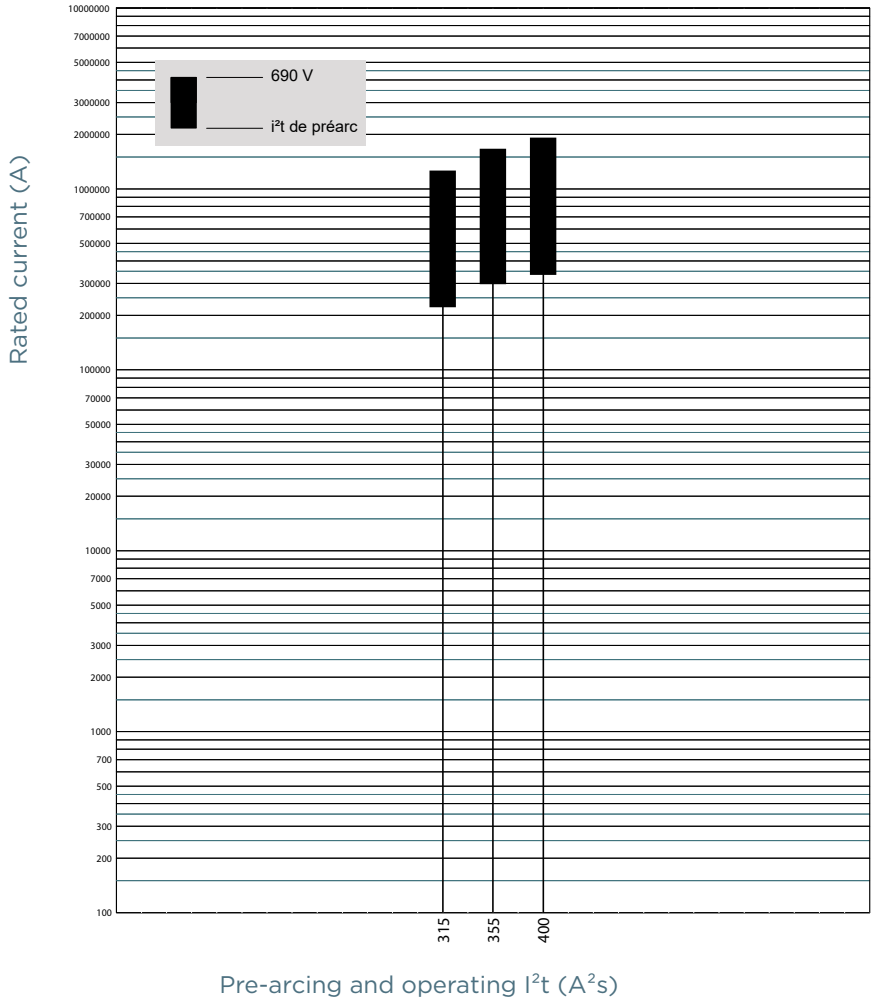

©2024 Mersen. All rights reserved. Mersen reserves the right to change, adapt, limit or discontinue its products. Therefore the data provided herein are for information only and are not contractually binding. To ensure that Mersen provides the best solution to your needs, please contact and provide Mersen with all relevant technical specifications and conditions.

PRE-ARCING AND OPERATING I²T CHARACTERISTICS

Size 3, 500V gG

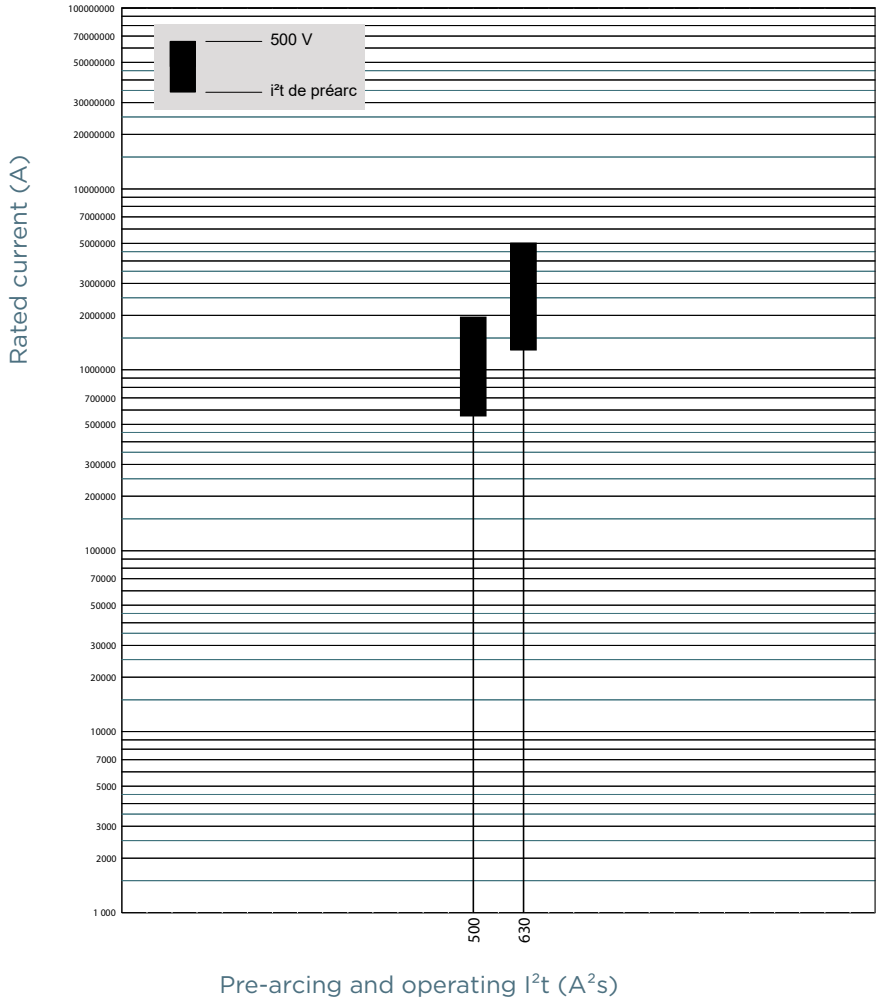

©2024 Mersen. All rights reserved. Mersen reserves the right to change, adapt, limit or discontinue its products. Therefore the data provided herein are for information only and are not contractually binding. To ensure that Mersen provides the best solution to your needs, please contact and provide Mersen with all relevant technical specifications and conditions.

PRE-ARCING AND OPERATING I²T CHARACTERISTICS

Size 4, 690V gG

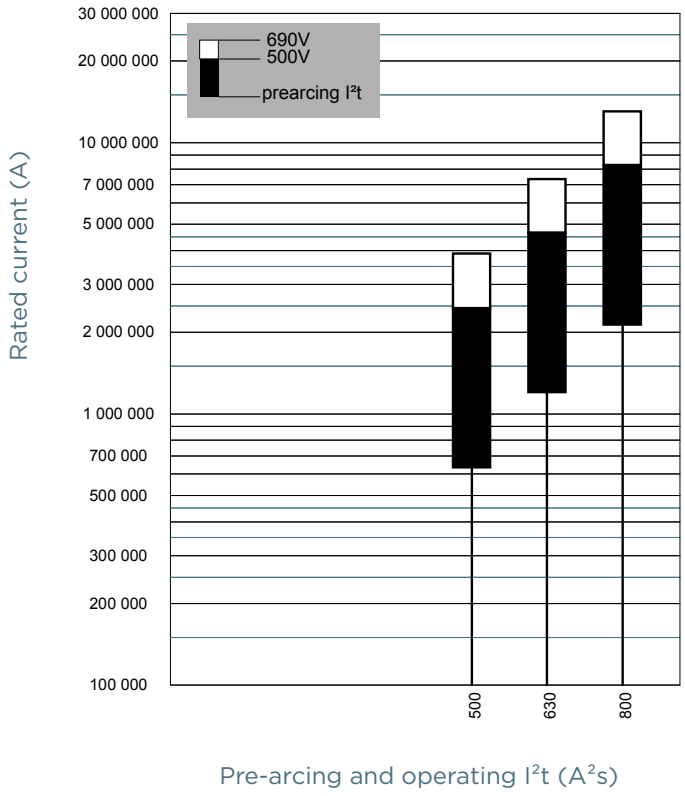

©2024 Mersen. All rights reserved. Mersen reserves the right to change, adapt, limit or discontinue its products. Therefore the data provided herein are for information only and are not contractually binding. To ensure that Mersen provides the best solution to your needs, please contact and provide Mersen with all relevant technical specifications and conditions.

PRE-ARCING AND OPERATING I²T CHARACTERISTICS

Size 4, 500V gG

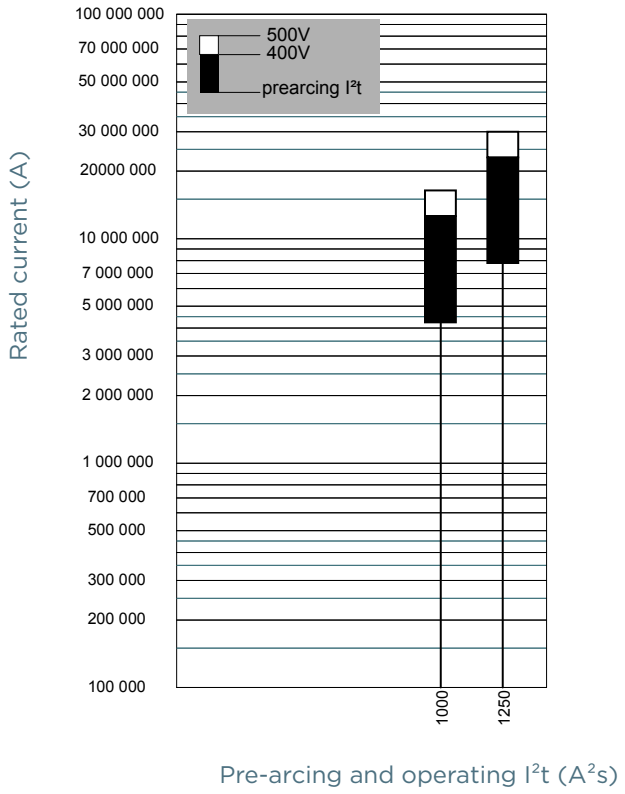

©2024 Mersen. All rights reserved. Mersen reserves the right to change, adapt, limit or discontinue its products. Therefore the data provided herein are for information only and are not contractually binding. To ensure that Mersen provides the best solution to your needs, please contact and provide Mersen with all relevant technical specifications and conditions.

DIMENSIONS

Size 0 (126458)

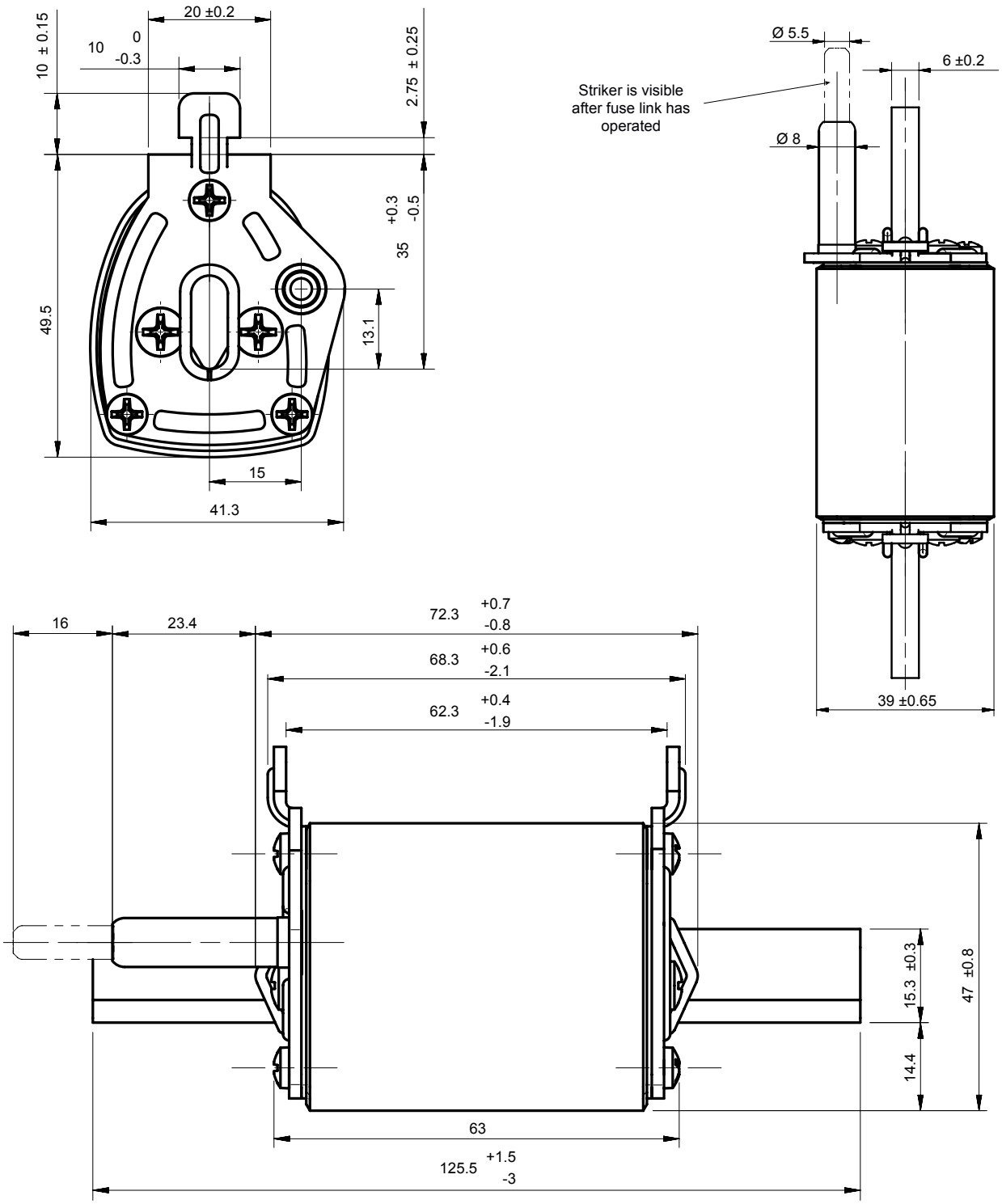

Dimensions in mm

©2024 Mersen. All rights reserved. Mersen reserves the right to change, adapt, limit or discontinue its products. Therefore the data provided herein are for information only and are not contractually binding. To ensure that Mersen provides the best solution to your needs, please contact and provide Mersen with all relevant technical specifications and conditions.

DIMENSIONS

Size 1 (126503)

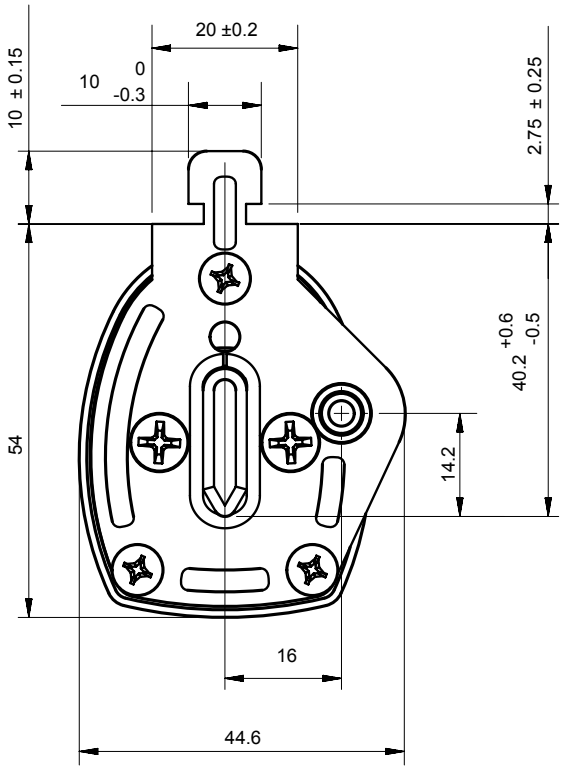

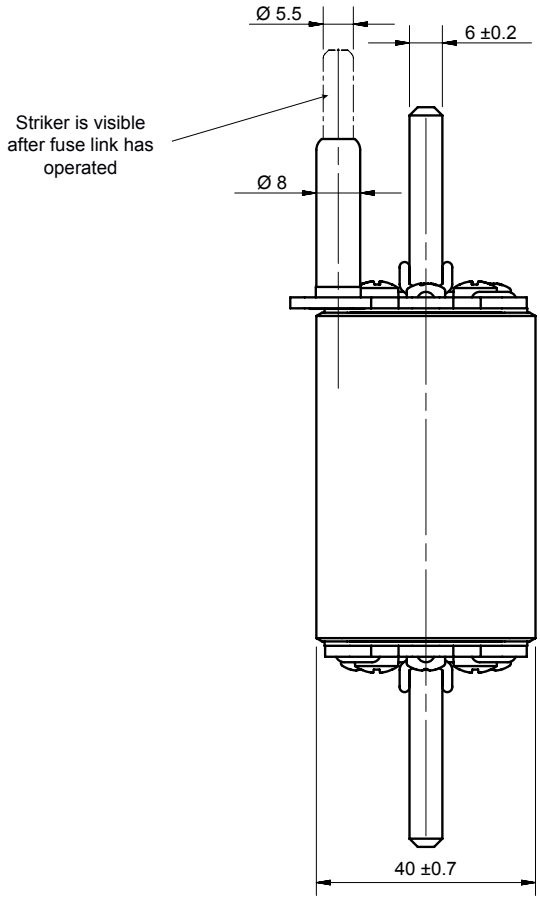

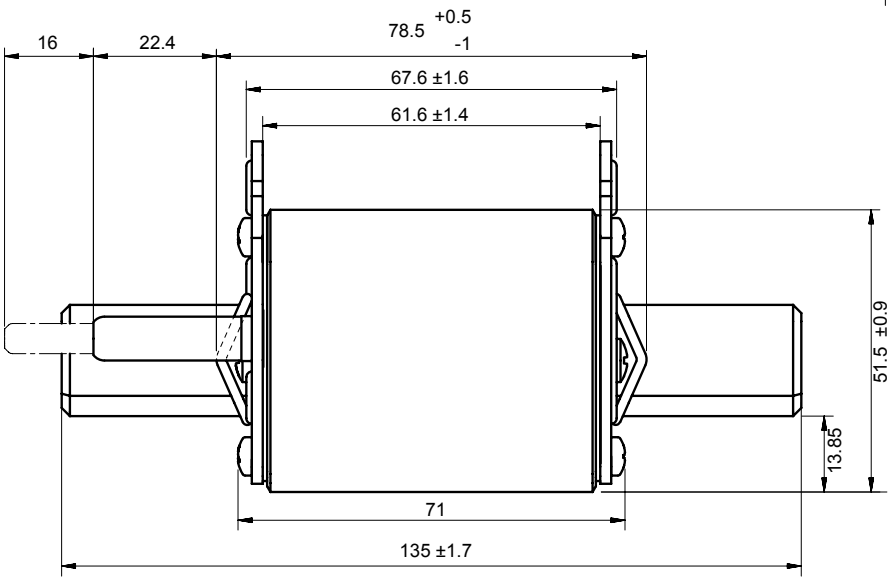

Dimensions in mm

©2024 Mersen. All rights reserved. Mersen reserves the right to change, adapt, limit or discontinue its products. Therefore the data provided herein are for information only and are not contractually binding. To ensure that Mersen provides the best solution to your needs, please contact and provide Mersen with all relevant technical specifications and conditions.

DIMENSIONS

Size 2 (126505)

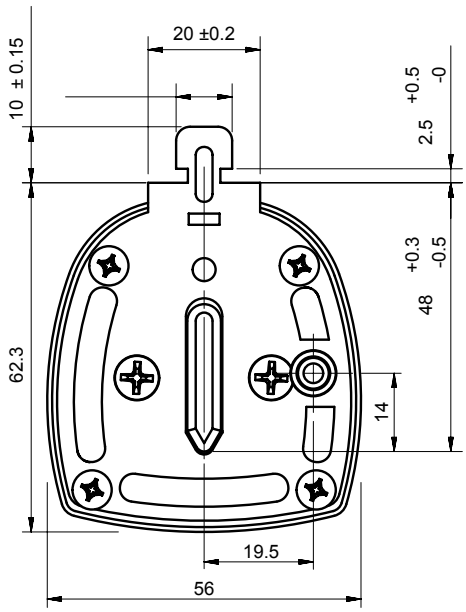

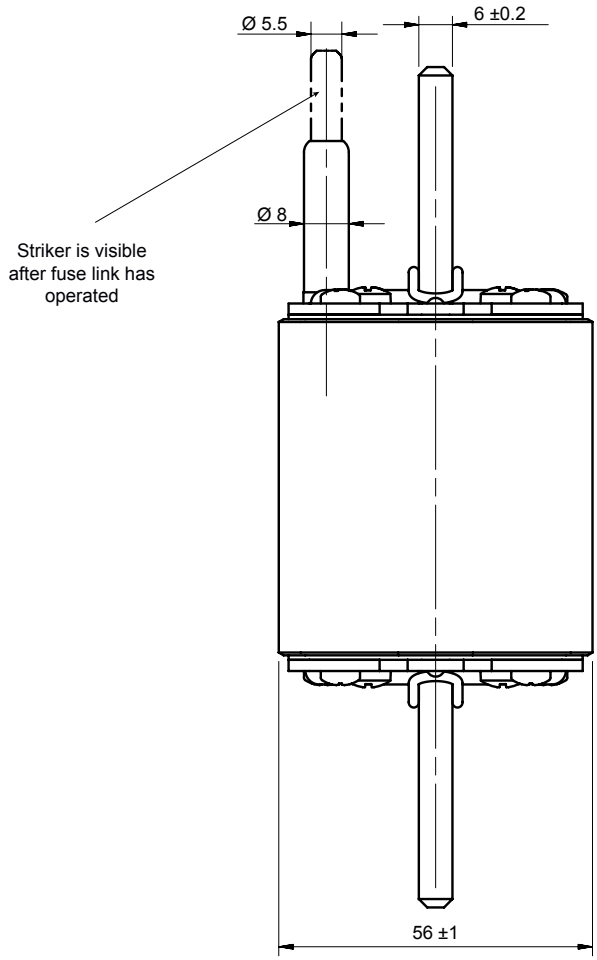

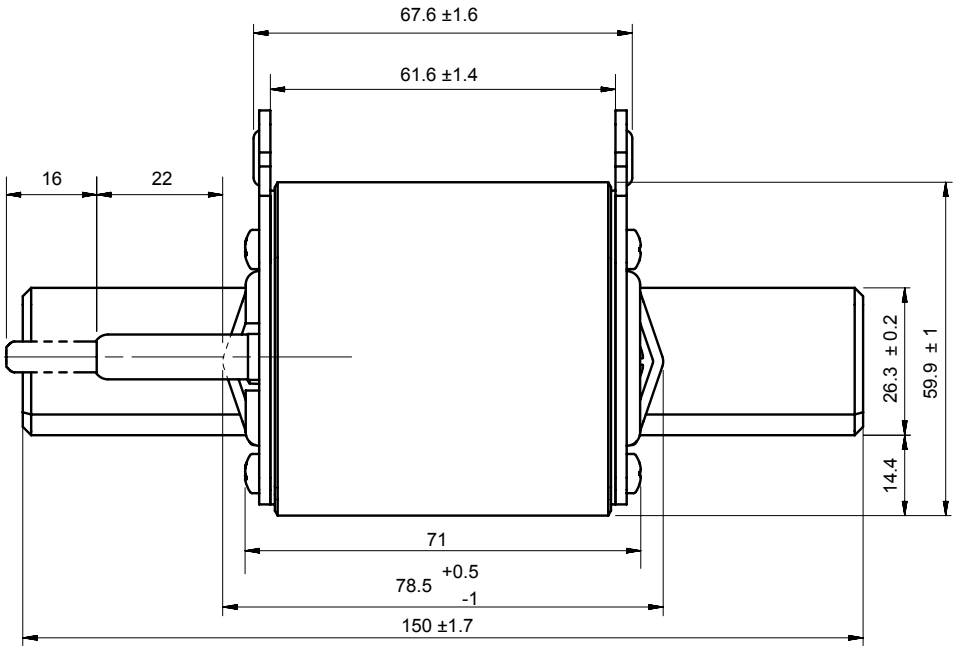

Dimensions in mm

©2024 Mersen. All rights reserved. Mersen reserves the right to change, adapt, limit or discontinue its products. Therefore the data provided herein are for information only and are not contractually binding. To ensure that Mersen provides the best solution to your needs, please contact and provide Mersen with all relevant technical specifications and conditions.

DIMENSIONS

Size 3 (126508)

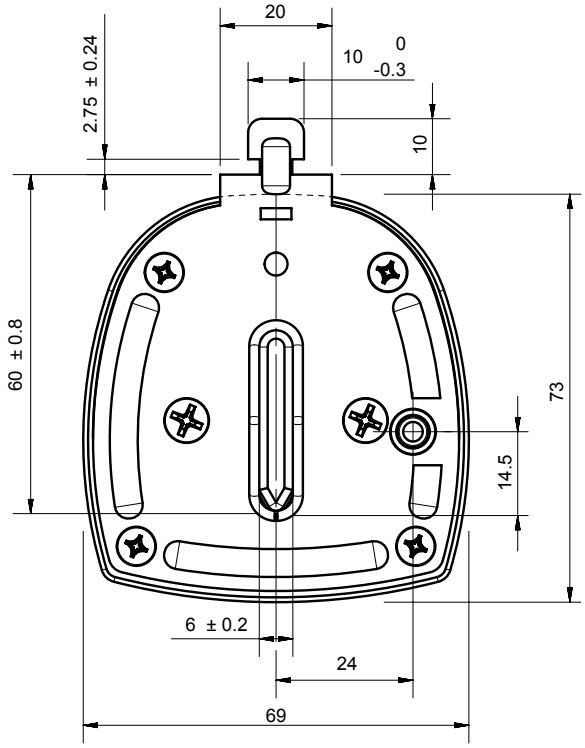

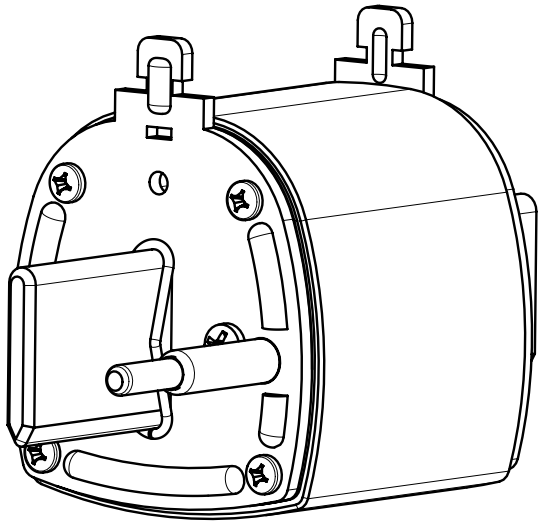

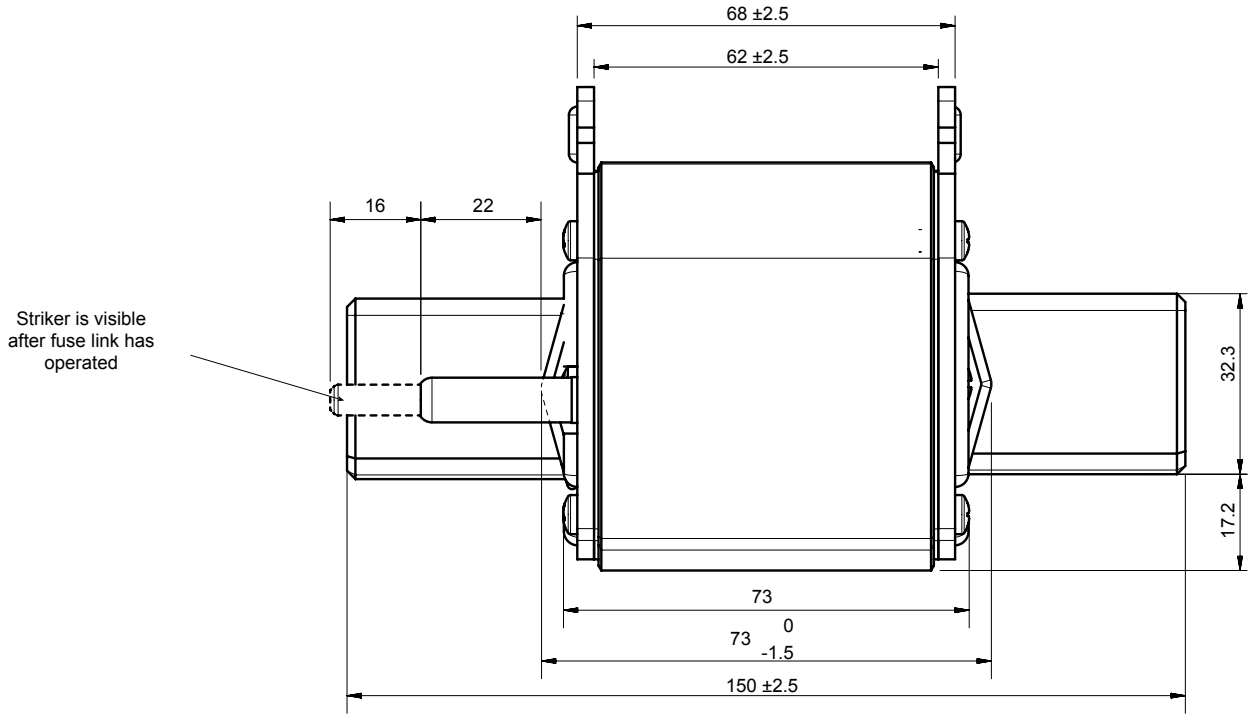

Dimensions in mm

©2024 Mersen. All rights reserved. Mersen reserves the right to change, adapt, limit or discontinue its products. Therefore the data provided herein are for information only and are not contractually binding. To ensure that Mersen provides the best solution to your needs, please contact and provide Mersen with all relevant technical specifications and conditions.

DIMENSIONS

Size 4 (1037473)

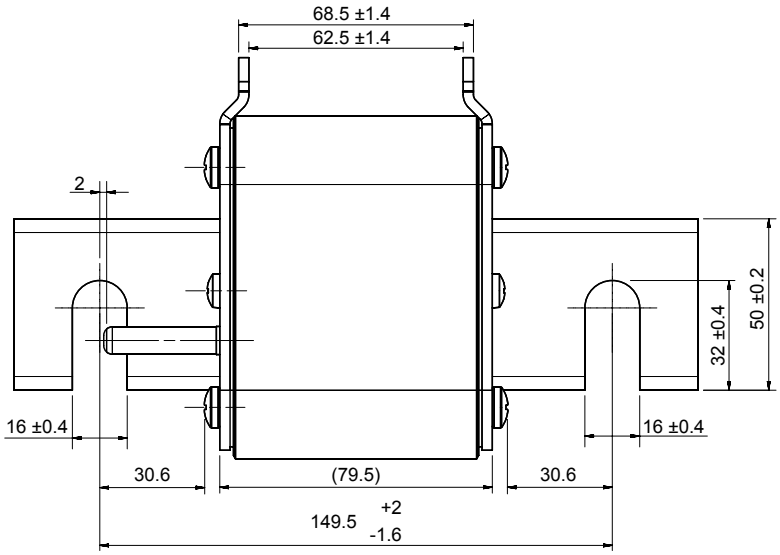

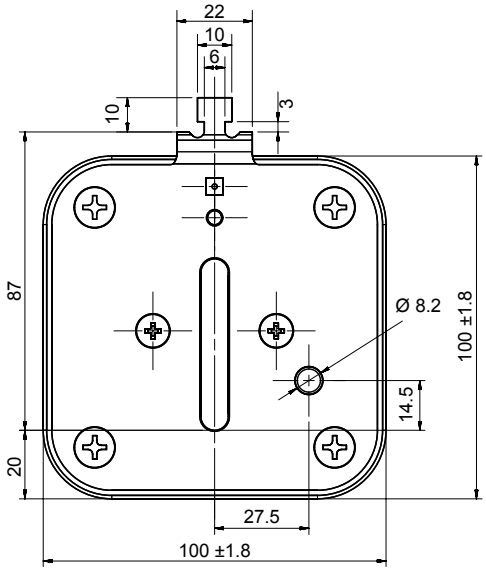

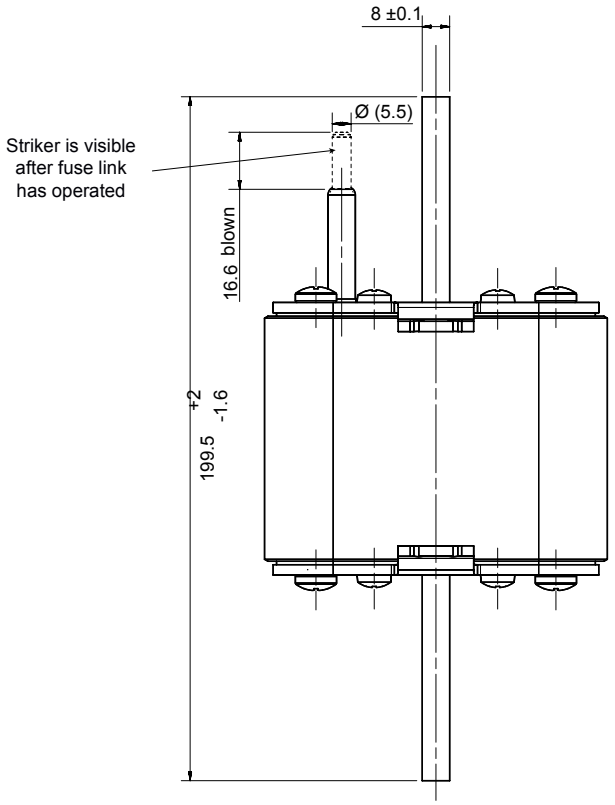

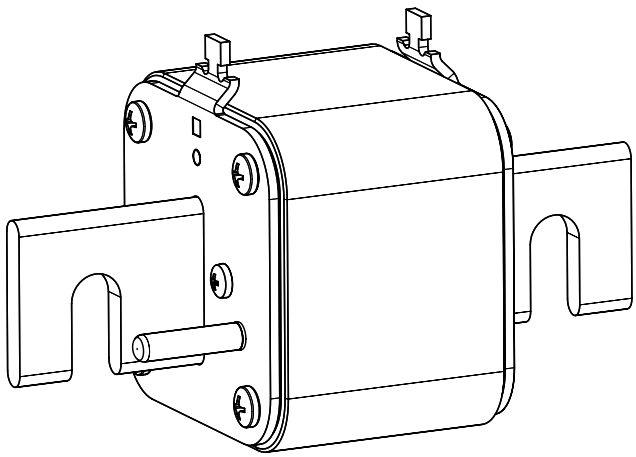

Dimensions in mm

©2024 Mersen. All rights reserved. Mersen reserves the right to change, adapt, limit or discontinue its products. Therefore the data provided herein are for information only and are not contractually binding. To ensure that Mersen provides the best solution to your needs, please contact and provide Mersen with all relevant technical specifications and conditions.