PRODUCT INFORMATION PACKET

Model No: 5KCP49RN9463S
Catalog No: 5KCP49RN9463S
General Purpose Motor, 1/2 HP, 1 Ph, 60/50 Hz, 230 V, 56H Frame, DP

Regal and LEESON are trademarks of Regal Rexnord Corporation or one of its affiliated companies.
©2025 Regal Rexnord Corporation, All Rights Reserved. MC017097E

Nameplate Specifications

Phase	1	Output HP	1/2 Hp
Output KW	0.37 kW	Voltage	230 V
Speed	1650/1390 rpm	Service Factor	1
Frame	56H	Enclosure	Drip Proof
Thermal Protection	Automatic	Ambient Temperature	65 °C
Frequency	60/50 Hz	Current	3.0-2.0 A
Power Factor	0	Duty	Continuous
Insulation Class	B	KVA Code	A
Drive End Bearing Size	6203	Opp Drive End Bearing Size	6203
UL	Recognized	CSA	Y
CE	N		

Technical Specifications

Electrical Type	Permanent Split Capacitor	Starting Method	Across The Line
Poles	4	Rotation	Counterclockwise
Motor Orientation	Any	Drive End Bearing	Locked
Opp Drive End Bearing	Ball	Frame Material	Rolled Steel
Shaft Type	NEMA 56H	Shaft Diameter	0.625 in
Connection Drawing	52A110572	Outline Drawing	52A111627P1

This is an uncontrolled document once printed or downloaded and is subject to change without notice. Date Created:11/26/2025

SHEET 1 | REV 2 | 52A111627 | SIZE A | DRAWING NO.

THIRD ANGLE PROJECTION

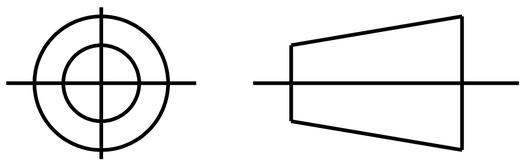

REVISIONS			
REV.	DESCRIPTION	DATE	APPROVED
1	CHG TO RBC FORMAT PER IS05-1777	05/01/06	SUDHA
2	BEARING DESCRIPTION UPDATED PER IS12-3518	07/19/12	KALAL

NOTES:

1. 40 FR, 230V, 60/50HZ, 1390/1650, 0.35/0.5HP PSC MOTOR
2. MOTOR DESIGNED TO OPERATE AT 230V±10% AND 60/50 HZ
3. CLASS OF INSULATION - B
4. RUN CAP PART-976B399AAP11- 20MFD, 370V
5. BEARINGS: PE - LOCKED BEARING - 6203
   OPE - EC BALL BEARING - 6203
6. APPLICATION - POWER CONVERTER MOTOR

* W IS A VARIABLE CLEARANCE DUE TO VARIATIONS IN PARTS AND ASSEMBLY

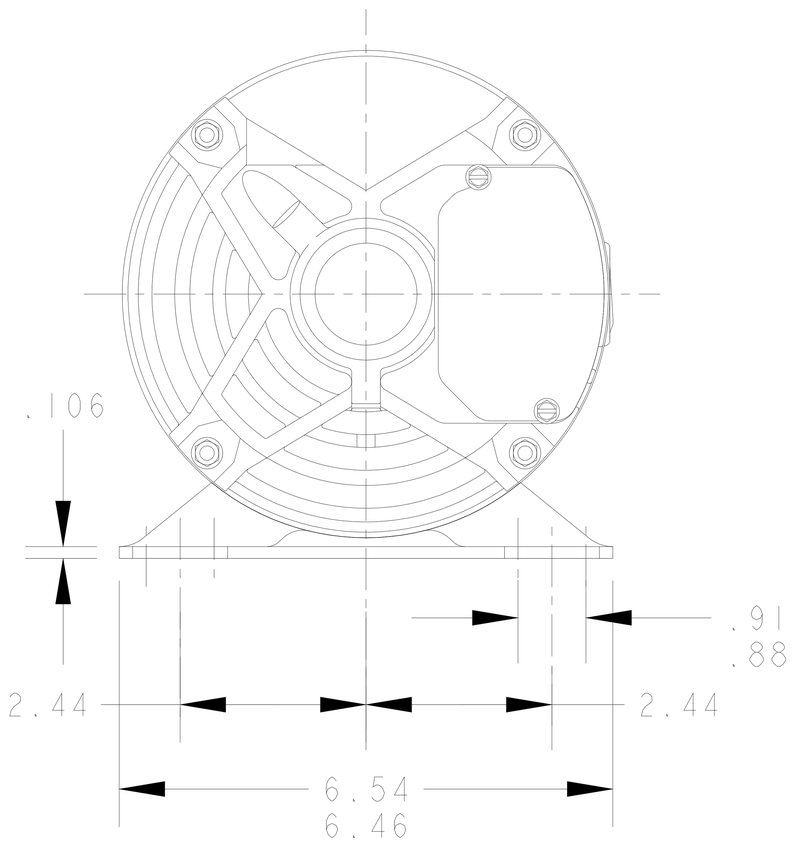

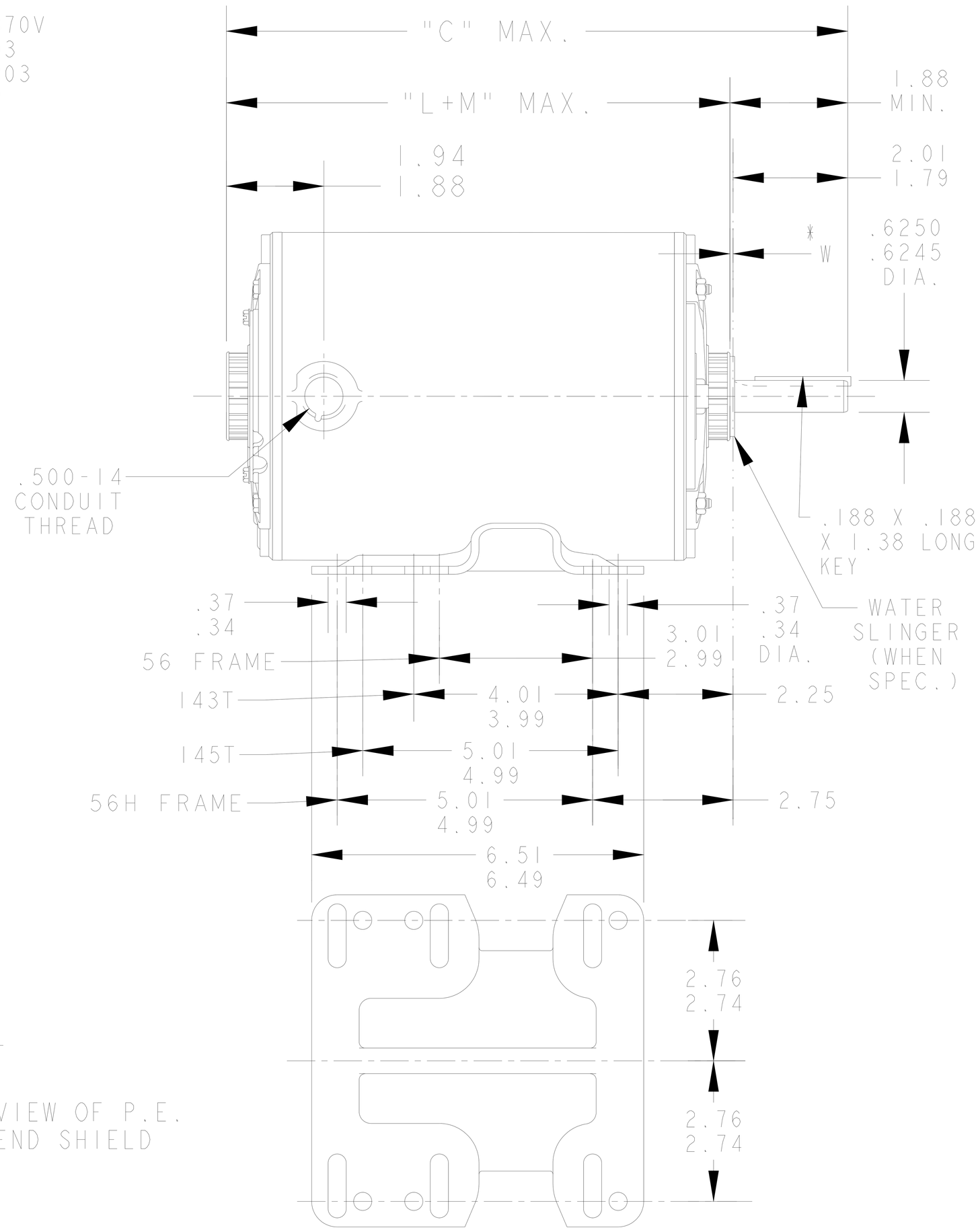

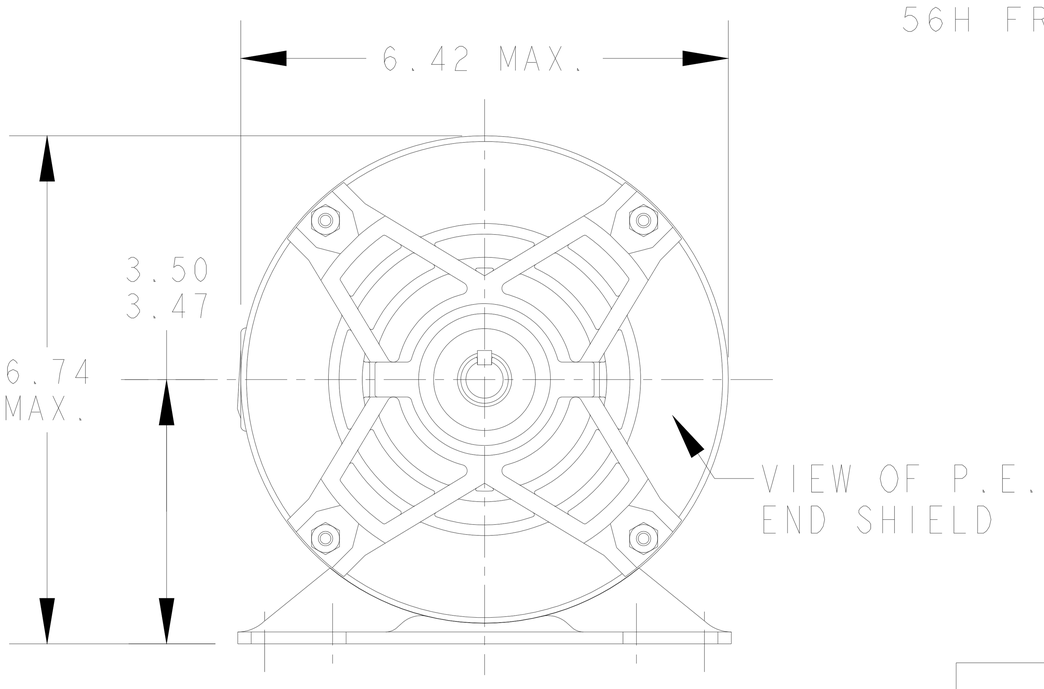

ALL DIMENSIONS ARE IN INCHES

P	TYPE	GE SIZE	NEMA FR.	"C"	"L+M"	MIN. SHELL
1	K	49	56H	12.00	11.00	7.68

SIGNATURES		DATE
MODEL	DURGA	07/08/04
DETAIL	.	.
CHECKED	.	.
ENGRG	.	.
MFG	.	.
QUALITY	.	.
ISSUED	DURGA	07/08/04

FOR ADDITIONAL INFO REFER TO:
APPLIED PRACTICES .
DIMENSIONS ARE IN INCHES ✓
MATERIAL .
SOLID MODEL: 52A111627

REGAL BELOIT

REGAL-BELOIT CORPORATION

TITLE

OUTLINE

GENERAL PURPOSE MOTOR OPEN - BALL BEARING WELDED BASE FMF - 40 FRAME PSC MOTOR

SIZE	DRAWING	REV
A	52A111627	2

SCALE: 0.250 | REF. No: . | SHEET 1 OF 1