PRODUCT INFORMATION PACKET

Model No: 5K49RN6429S
Catalog No: K1510
Condenser Fan Motor, 1 HP, 3 Ph, 60 Hz, 575 V, 1200 RPM, 56Z Frame, DP

Regal and LEESON are trademarks of Regal Rexnord Corporation or one of its affiliated companies.
©2025 Regal Rexnord Corporation, All Rights Reserved. MC017097E

Nameplate Specifications

Phase	3	Output HP	1 Hp
Output KW	0.75 kW	Voltage	575 V
Speed	1140 rpm	Service Factor	1
Frame	56Z	Enclosure	Drip Proof
Thermal Protection	Automatic	Efficiency	75.7 %
Ambient Temperature	65 °C	Frequency	60 Hz
Current	1.6 A	Power Factor	0
Duty	Continuous	Insulation Class	B
KVA Code	J	Drive End Bearing Size	6203
Opp Drive End Bearing Size	6203	UL	Recognized
CSA	Yes	CE	N
Number of Speeds	1		

Technical Specifications

Electrical Type	Three Phase	Starting Method	N/R
Poles	6	Rotation	Counterclockwise/Clockwise
Mounting	Round	Motor Orientation	VSU
Drive End Bearing	BALL	Opp Drive End Bearing	BALL
Frame Material	Rolled Steel	Overall Length	16.02 in
Frame Length	7.68 in	Shaft Diameter	0.630 in
Shaft Extension	6 in		
Outline Drawing	52A110687P1	Connection Drawing	52A110554

This is an uncontrolled document once printed or downloaded and is subject to change without notice. Date Created:07/31/2025

Uncontrolled Copy

52A110687

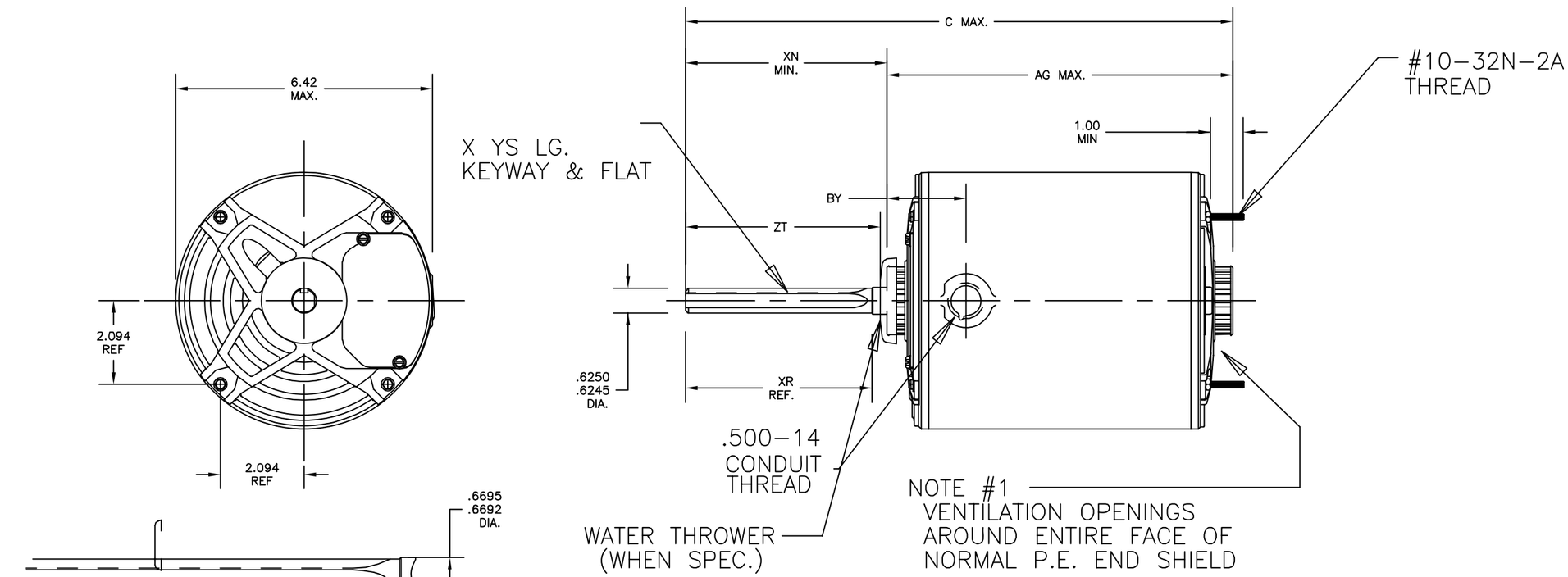

ENLARGED VIEW
OF SHAFT EXTENSION

P	TYPE	RBC SIZE	NEMA FR	XN	C	AG	REMARKS	SHELL LG.	BY	XR	YS	ZT
3	K	48	56Z	6.00	16.77	10.65	NOTE #1	8.43	2.07/1.95	5.74	4.00	
2	K	49	56Z	6.00	14.89	8.77	NOTE #1	6.55	2.07/1.95	5.74	4.00	
1	K	49	56Z	6.00	16.02	9.90	NOTE #1	7.68	2.07/1.95	5.74	4.00	5.77 5.73

NO.	REVISION	BY & DATE	CHK
B	REPLACED GE WITH RBC PER ECO-0059212	PVN 09/8/2014	DS
1	CHG TO RBC FORMAT PER IS05-1777	SUDA 4/25/06	SUDA

TOLERANCES UNLESS SPECIFIED

DEC.	INCHES
.X	±0.1
.XX	±0.02
.XXX	±0.005
.XXXX	±0.0005
ANG	±1.0

REGAL BELOIT — REGAL-BELOIT CORPORATION

TITLE: OUTLINE
40 FR. REDESIGN - OUTDOOR CONDENSOR -

MAT'L.
FINISH

DRAWN DS 5/23/03
CHK
APPD DS 09/8/2014
SCALE 1=1
REF
FMF
PREV

THIS DRAWING IN DESIGN AND DETAIL IS OUR PROPERTY AND MUST NOT BE USED EXCEPT IN CONNECTION WITH OUR WORK ALL RIGHTS OF DESIGN AND INVENTION ARE RESERVED
THIS IS AN ELECTRONICALLY GENERATED DOCUMENT - DO NOT SCALE THIS PRINT

RFP
DIST
CAD FILE 52A110687
SIZE A
DRAWING NO. 52A110687
REV. B

SHEET
REV 5
52A110554
DRAWING NO.
SIZE A

THIRD ANGLE PROJECTION

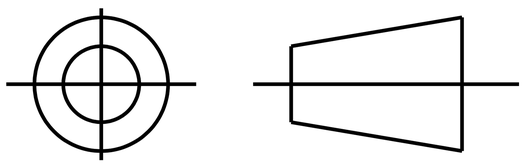

REVISIONS			
REV.	DESCRIPTION	DATE	APPROVED
4	UPDATED TO RBC FORMAT	01/17/06	MAM
5	CHD. ROT. FROM CCW/CW TO DUAL	03/08/13	KARTHIK

DUAL ROTATION - SINGLE VOLTAGE
TYPE K - THREE PHASE - 3 LEAD
THERMAL PROTECTION

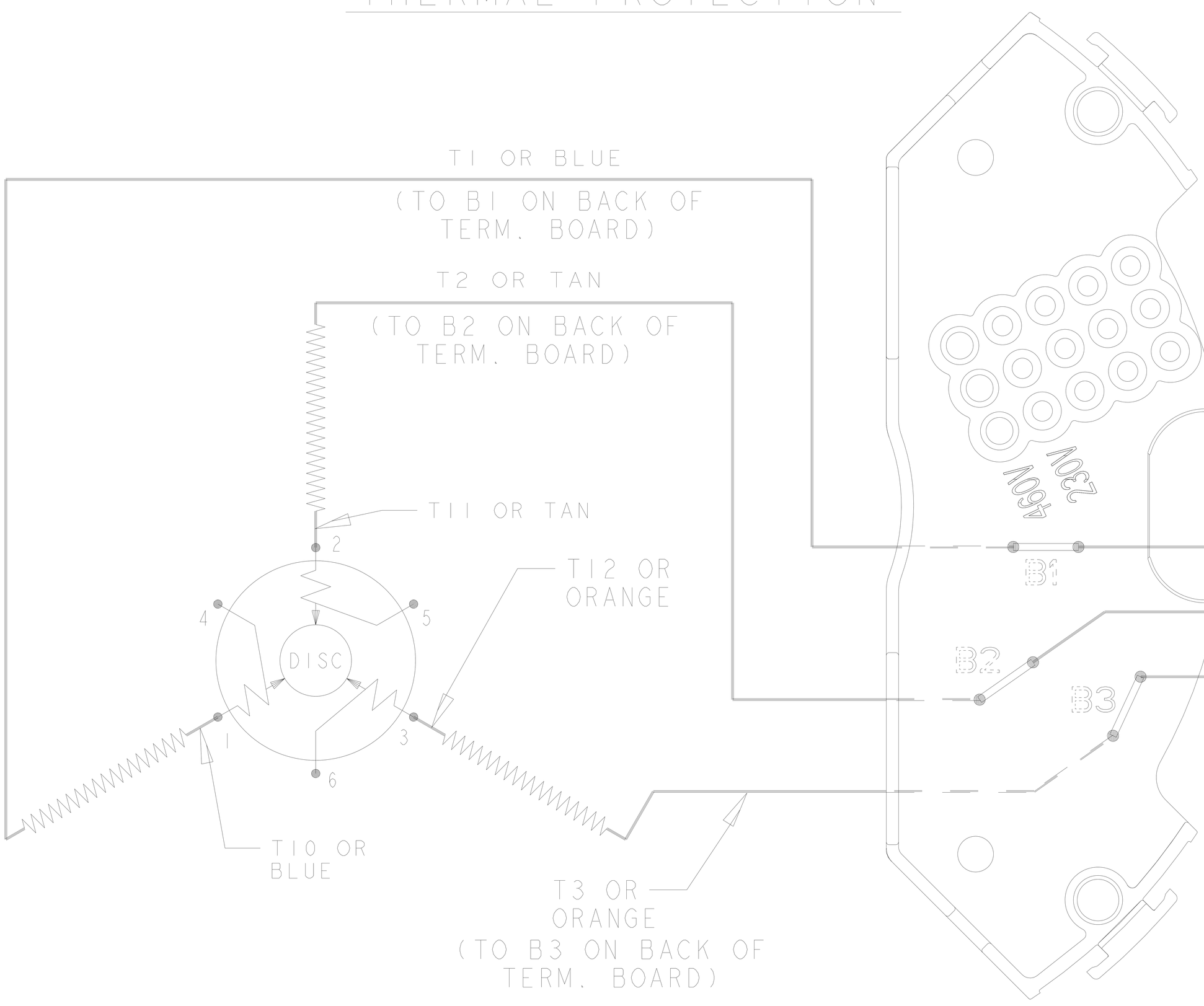

TO REVERSE ROTATION, INTERCHANGE ANY TWO LINE CONNECTIONS TO L1, L2 OR L3

TERMINAL BOARD - 114D918

REF. DIAG. - NONE

CONNECTION LABEL - NP52X333338AA

SIGNATURES		DATE
MODEL	PC MOHAN	09/24/02
DETAIL	.	.
CHECKED	.	.
ENGRG	.	.
MFG	.	.
QUALITY	.	.
ISSUED	PC MOHAN	09/24/02

SOLID MODEL: 52A110554

FOR ADDITIONAL INFO REFER TO:
APPLIED PRACTICES .
DIMENSIONS ARE IN INCHES
MATERIAL .

REGAL BELOIT

REGAL-BELOIT CORPORATION

TITLE

CONNECTION DIAGRAM

.

FMF: TYPE K - VOLTAGE CHANGE DEVICE - SINGLE VOLTAGE

SIZE	DRAWING	REV
A	52A110554	5

SCALE: 1.000 | REF. No: . | SHEET 1 OF 1