PRODUCT INFORMATION PACKET

Model No: 103460.00
Catalog No: 103460.00
Instant Reversing Motor, 1/2 HP, 1 Ph, 60 Hz, 115 V, 56 Frame, DP

Regal and LEESON are trademarks of Regal Rexnord Corporation or one of its affiliated companies.
©2025 Regal Rexnord Corporation, All Rights Reserved. MC017097E

Nameplate Specifications

Phase	1	Output HP	1/2 Hp
Output KW	0.37 kW	Voltage	115 V
Speed	1625 rpm	Service Factor	1
Frame	56	Enclosure	Drip Proof
Thermal Protection	Manual	Ambient Temperature	40 °C
Frequency	60 Hz	Current	5.0 A
Power Factor	0	Duty	Continuous
Insulation Class	B	KVA Code	A
Drive End Bearing Size	6203	Opp Drive End Bearing Size	6203
UL	Recognized	CSA	Y
CE	N		

Technical Specifications

Electrical Type	Permanent Split Capacitor	Starting Method	Across The Line
Poles	4	Rotation	Instant Reversible
Motor Orientation	Any	Drive End Bearing	Ball
Opp Drive End Bearing	Ball	Frame Material	Rolled Steel
Shaft Type	NEMA 56	Shaft Diameter	0.625 in
Connection Drawing	52A109207	Outline Drawing	52A113083P1

This is an uncontrolled document once printed or downloaded and is subject to change without notice. Date Created:11/13/2025

SHEET 1 | REV 3 | 52A113083 | DRAWING NO. | SIZE A

THIRD ANGLE PROJECTION

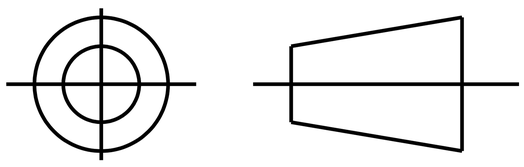

REVISIONS

REV.	DESCRIPTION	DATE	APPROVED
1	SHELL VENTS REMOVED PER IS10-4814	11/16/2010	PRAVEEN.I
2	ADDED DIM. "ZA" FOR CLAMP BOLT EXT. PER IS10-3790	02/09/12	RAJESH
3	REMOVED DIM. "ZA" FOR CLAMP BOLT EXT. PER IS12-1788	10/23/12	RAJESH

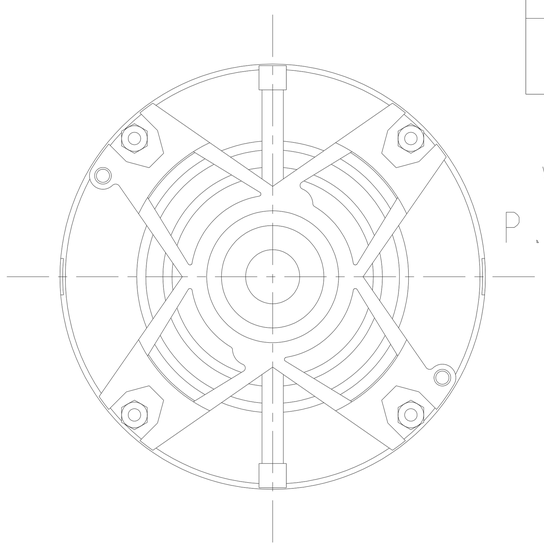

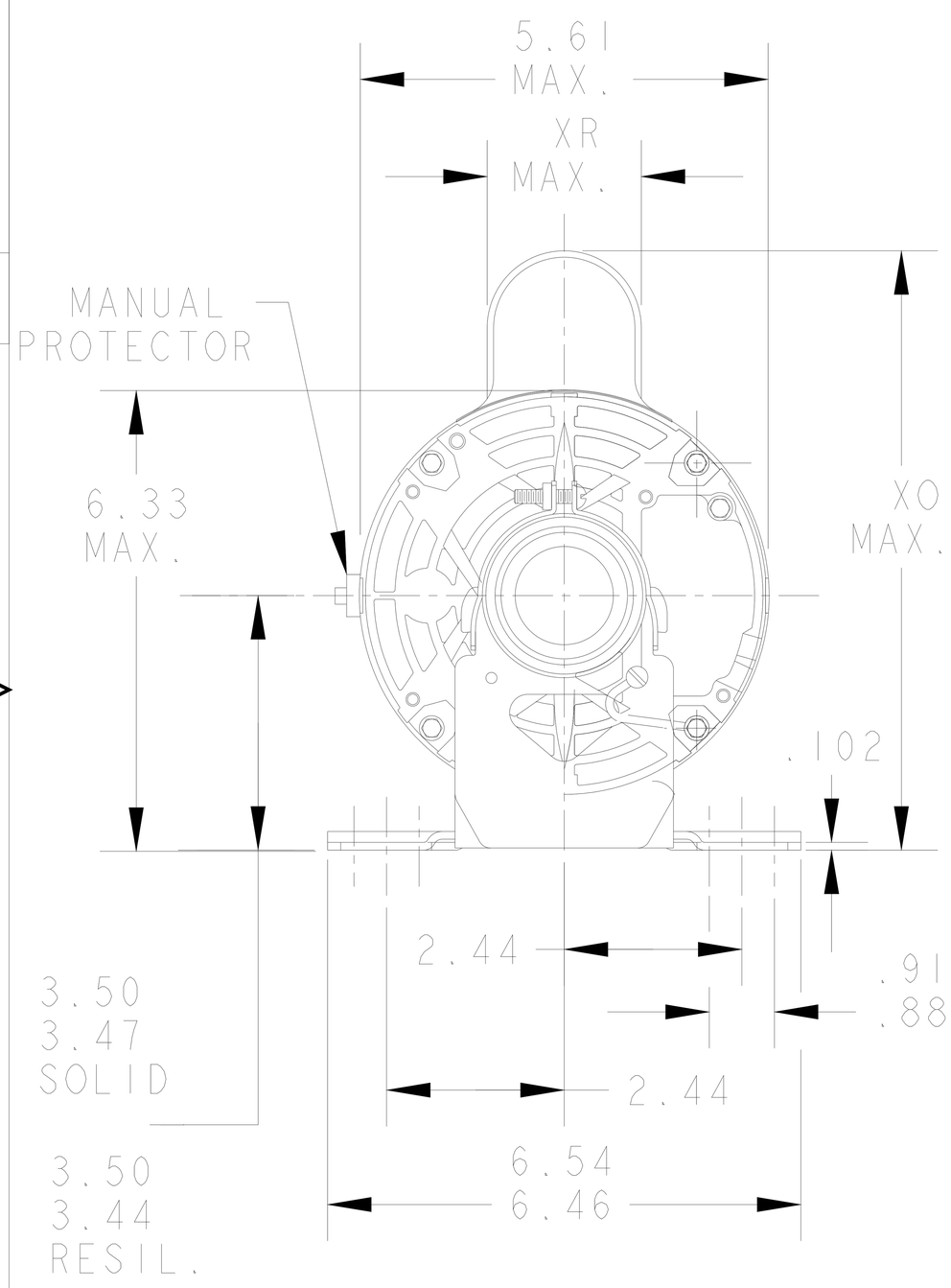

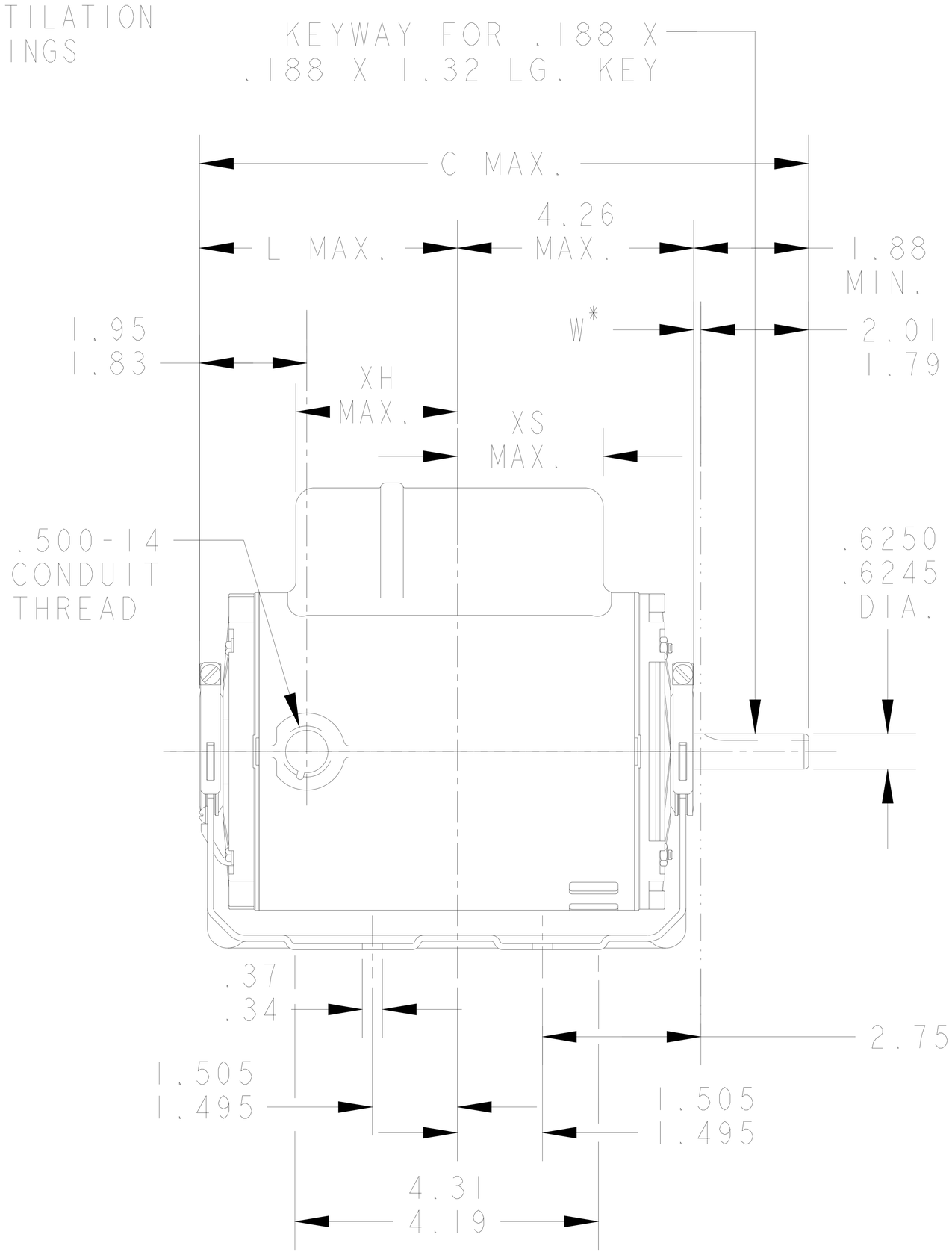

W* IS A CLEARANCE DUE TO VARIATION IN PARTS AND ASSEMBLY.

1	KCP	35	56	9.94	3.80	2.66	3.04	2.10	8.53					5.79
P	TYPE	FR SIZE	NEMA FR	C	L	XH	XS	XR	XO					SHELL REF.

SIGNATURES		DATE
MODEL	ARCHANA	05/26/10
DETAIL	.	.
CHECKED	.	.
ENGRG	.	.
MFG	.	.
QUALITY	.	.
ISSUED	ARCHANA	05/26/10

FOR ADDITIONAL INFO REFER TO:
APPLIED PRACTICES .
DIMENSIONS ARE IN INCHES
MATERIAL .
SOLID MODEL: 52A113083

REGAL BELOIT

REGAL-BELOIT CORPORATION

TITLE

OUTLINE

FORM N - GENERAL PURPOSE MOTOR - DRIP PROOF-RESIL.BASE - BALL BEARING

SIZE	DRAWING	REV
A	52A113083	3

SCALE: 1.000 | REF. No: . | SHEET 1 OF 1

Uncontrolled Copy

THIRD ANGLE PROJECTION

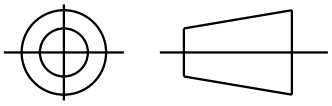

REVISIONS			
REV.	DESCRIPTION	DATE	APPROVED
6	UPDATED TO RBC FORMAT	01/12/06	MAM

SHEET 1 | REV 6 | 52A109207 | DRAWING NO. | SIZE A

REVERSIBLE ROTATION - SINGLE VOLTAGE - TYPE KCP WITH CAPACITOR

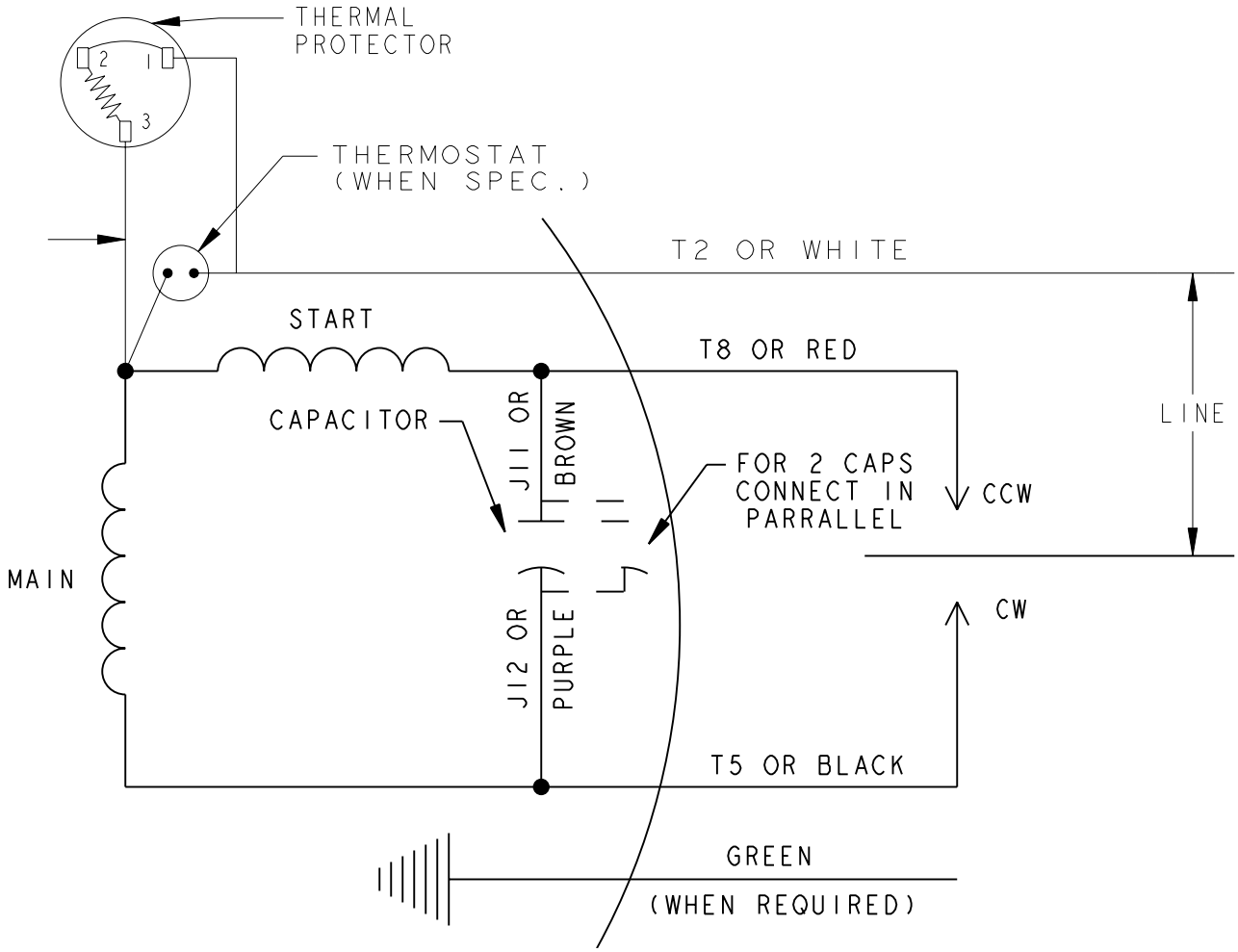

REF. DIAG. - NONE

CONNECTION LABEL - 52X333135

SIGNATURES		DATE
MODEL	B.L.J.	04/14/93
DETAIL	.	.
CHECKED	.	.
ENGRG	.	.
MFG	.	.
QUALITY	.	.
ISSUED	B.L.J.	04/14/93
SOLID MODEL: 52A109207		

FOR ADDITIONAL INFO REFER TO:
APPLIED PRACTICES .
DIMENSIONS ARE IN INCHES
MATERIAL .

REGAL BELOIT — REGAL-BELOIT CORPORATION

TITLE CONNECTION DIAGRAM

FMF: 5KCP33GNA335AX

SIZE A | DRAWING 52A109207 | REV 6

SCALE: 1.000 | REF. No: . | SHEET 1 OF 1