IEC Pin and Sleeve

100/125 A, 120/208 VAC, 4-POLE, 5-WIRE

Angled Receptacle

Features

- IP67 environmental ratings
- Impact and corrosion resistant insulated non-metallic housing
- Sequential contact engagement to prevent a momentary over-voltage
- Color coded housings provide quick identification of mating devices

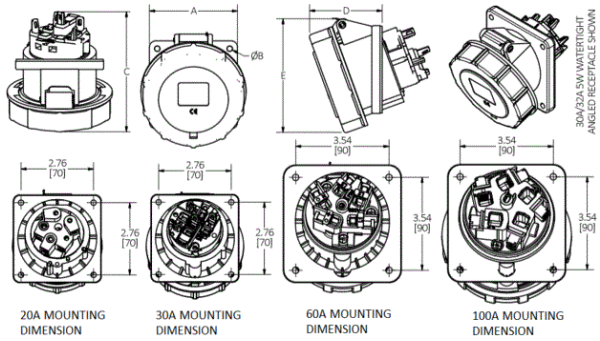

Ordering Information

Description	Series	Color	UPC Number	Catalog Number
Heavy Duty Products, IEC Pin and Sleeve	Watertight IP67	Blue	781786783492	**BRY5100AR9W**

Complementary Products

Complementary Products	Adapter Plate, Back Box

Online Resources

Customer Sales Drawings
eCatalog

Listings

All constructions are UL Listed & cUL Listed
FileE14632
UL1686 Standard for Pin & Sleeve Configurations
VDE, CE

Specifications

Application	High Ampacity Connections
Connection	Pressure Screw Terminal
Wire Size	#4AWG to #1AWG
Material	PBT
Mounting	Screw Mount

Performance

Electrical

Dielectric Voltage	Withstand 3000V AC
Max. Working Voltage	600V AC RMS

Mechanical

Impact Resistance	Per CSA C22.2 No. 182.1 / UL1682
Product Identification	Identification and ratings are marked on device housing
Terminal Identification	Terminals identified in accordance with North American and IEC conventions

Environmental

Flammability	HB
Ingress Protection	IP67
Moisture Resistance	IEC 60309-1
Temperature Rating	Maximum Continuous: 75° C; Minimum Continuous: -40° C w/o impact, -25° with impact.

Bryant Electric – Hubbell Incorporated (Delaware) – 40 Waterview Drive – Shelton, CT 06484
Phone (800) 323-2792 – Fax (800) 543-0538