Fuji Molded Case Circuit Breakers Field-mountable Accessories

Fuji Electric
e-Front runners

Defeatable Rotary Handle Operating Mechanisms

***BW9V0CA* shown**

Rotary Operating Handles for Fuji MCCBs – Selection Guide

Breaker Type	V-type Handle	Price	V-type Handle	With the optional shaft (x= 6.102 (155))		With the optional shaft (x= 24.567 (624))		Mounting Screw	V-type Handle Mass lb. (kg)
			H: inch(mm)	Max. Mounting Depth H: inch(mm)	Range in which the hinge with H can be installed	Max. Mounting Depth H: inch(mm)	Range in which the hinge with H can be installed		
BW125	BW9V0CA	$62.00	4.134±0.078 (105±2)	9.843±0.078 (250±2)	5.512 to 9.843 (140 to 250)	28.307±0.078 (719±2)	28.307 - 5.591 (124 - 719)	M4 x 3.35 (85)	1.48 (0.67)
BW250	BW9V0GA	$62.00							

Notes: • Handle is an operating mechanism only; not for sealing enclosure door.
• Not available for side mounting
• For BW250 Series only: When mounting a terminal cover, cut away part of it because it hides the mounting screws for the breaker.

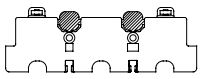

Remove the shaded parts in the figure .

125A, 250A Frame V type handle

• BW9V0CA, BW9V0GA (BW9VSG0, BW9VSG0-24: optional shafts)

Dimensions

mm [inches]

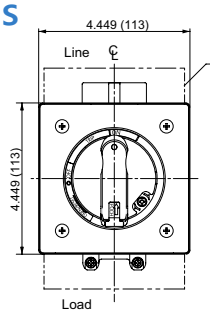

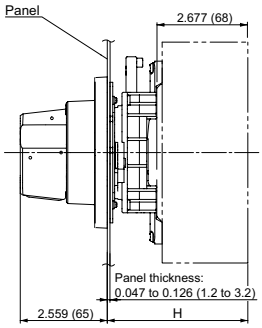

Door panel cutting

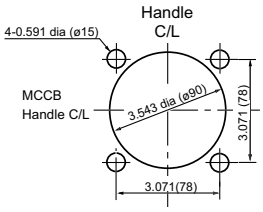

Note: Align the center of the hole cut in the panel with the center of the breaker handle.

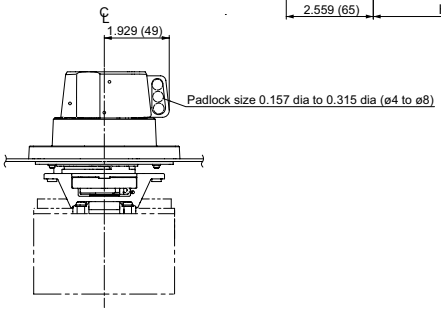

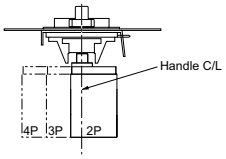

Installation caution area

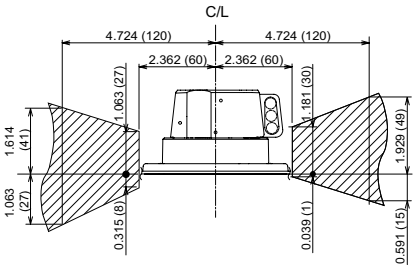

Use caution that any item mounted in shaded area can move freely.

Optional shafts
BW9VSG0
X = 6.102 (155)
BW9VSG0-24
X = 24.567 (624)

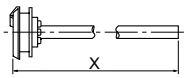

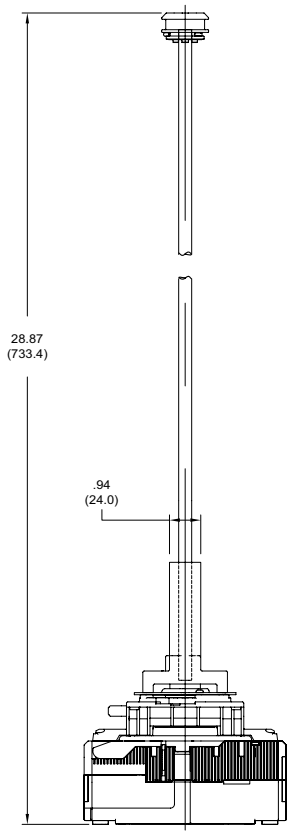

BW9VSG0-24 optional shaft Breaker and Shaft Assembly

Fuji Molded Case Circuit Breakers
Field-mountable Accessories

Fuji Electric
e-Front runners

Rotary Operating Handles for Fuji MCCBs – Selection Guide									
Breaker Type	V-type Handle	Price	V-type Handle	With the optional shaft (x= 3.504 (89))		With the optional shaft (x= 24 (609.6))		Mounting Screw	V-type Handle Mass lb. (kg)
			H: inch(mm)	Max. Mounting Depth H: inch(mm)	Range in which the hinge with H can be installed	Max. Mounting Depth H: inch(mm)	Range in which the hinge with H can be installed		
BW400	BW9V0HA	$94.00	7.48±0.078 (190±2)	9.843±0.078 (250±2)	7.95 to 9.843 (202to 250)	30.35±0.078 (771±2)	7.95 - 30.35 (202 - 771)	M4 x 3.35 (85)	1.48 (0.67)
BW630 BW800	BW9V0JA	$111.00							

Notes:
- Handle is an operating mechanism only; not for sealing enclosure door.
- Not available for side mounting

Dimensions

mm [inches]

400A, 630A, 800A Frame V type handle

- **BW9V0HA, BW9V0JA (BZ-VS2, BZ-VS2-24: optional shafts)**

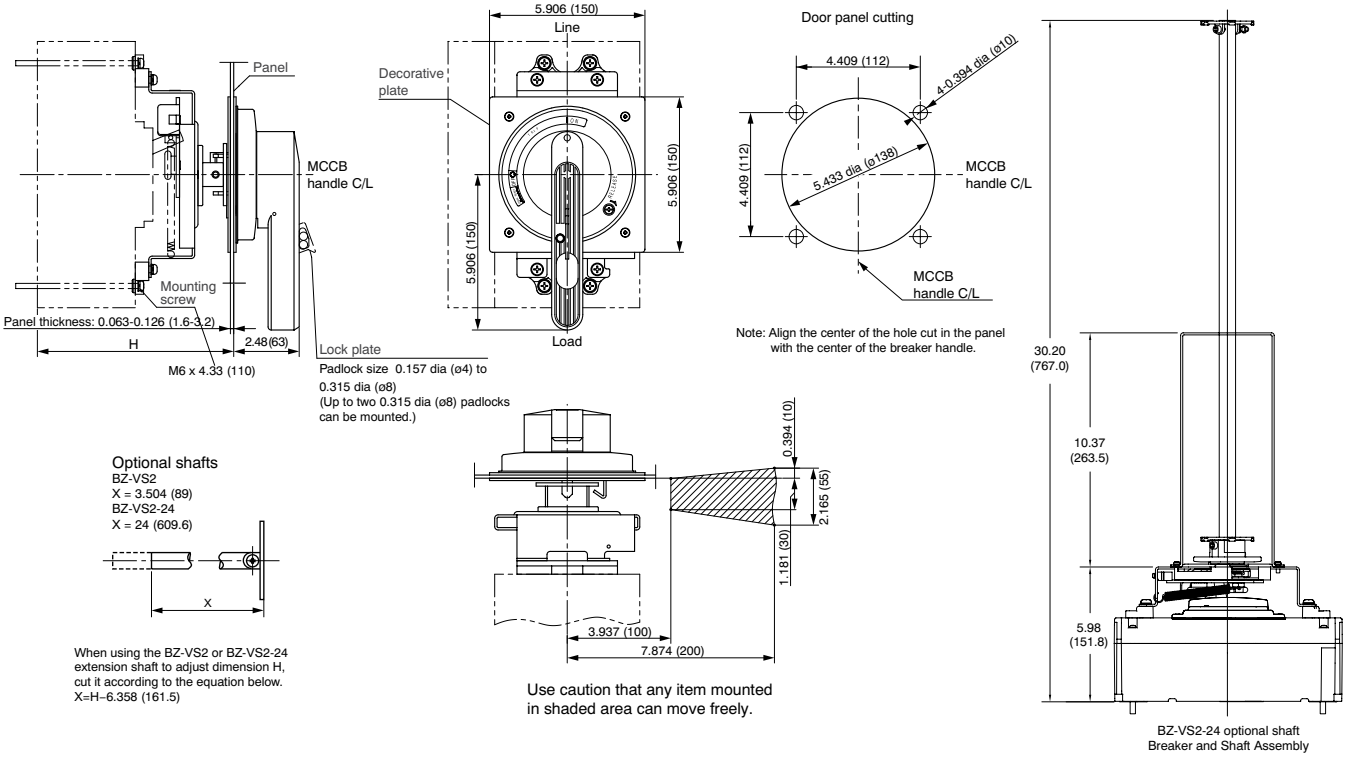

Fuji Molded Case Circuit Breakers Field-mountable Accessories

Defeatable Flexible Handle Operating Mechanisms

Fuji Electric
e-Front runners

***BW9F0JA-20A* shown**

Flex Shaft Handles for Fuji MCCBs – Selection Guide			
Breaker Type	***Handle Type***	***Price***	***Description***
BW125	BW9F0CA-15A	$330.00	Nema 12 flexible shaft handle for 125A frame. 59.06" (1.5m)cable
	BW9F0CA-20A	$343.00	Nema 12 flexible shaft handle for 125A frame. 78.74" (2m) cable
BW250	BW9F0GA-15A	$343.00	Nema 12 flexible shaft handle for 250A frame. 59.06" (1.5m)cable
	BW9F0GA-20A	$360.00	Nema 12 flexible shaft handle for 250A frame. 78.74" (2m) cable
BW400*	BW9F0HA-15A	$499.00	Nema 12 flexible shaft handle for 400A frame. 59.06" (1.5m)cable
	BW9F0HA-20A	$514.00	Nema 12 flexible shaft handle for 400A frame. 78.74" (2m) cable
BW630*& BW800*	BW9F0JA-15A	$540.00	Nema 12 flexible shaft handle for 630A or 800A frame. 59.06" (1.5m)cable
	BW9F0JA-20A	$554.00	Nema 12 flexible shaft handle for 630A or 800A frame. 78.74" (2m) cable

***Terminal covers for line side and load side included with Flange Disconnects. 2/pk**

Flex Handle Specifications				
Operating instructions	***• Operating handle facing up, Breaker is in ON position.*** ***• Operating handle facing down, Breaker is in OFF position or is reset.*** ***• Panel door cannot be opened when in ON, OFF or Trip position. In order to open the door, the handle must be turned toward reset position.*** ***• Release screw is standard. If you want to open a panel door in ON position, please turn the release screw using flat head screwdriver.***			
Frame Size	125A frame	250A frame	400A frame	630A/800 frame
Mechanical Endurance (cycles)	10,000	8,000	6,000	6,000
Ambient Temperature	14 to 140F (- 10 to 40°C)			
Relative Humidity	less than 95% RH			
Protection	NEMA Type12 IP54 (IEC60529)			
Conforming Standards	NFPA 79(2007), ANSI(Lockout), OSHA(1910.147, Lockout/tagout), UL489(cUL)			
Environment	No excessive dust, smoke, corrosive gases, flammable gases, steam or salt.			

Fuji Molded Case Circuit Breakers
Field-mountable Accessories

Dimensions

mm [inches]

BW9F0CA

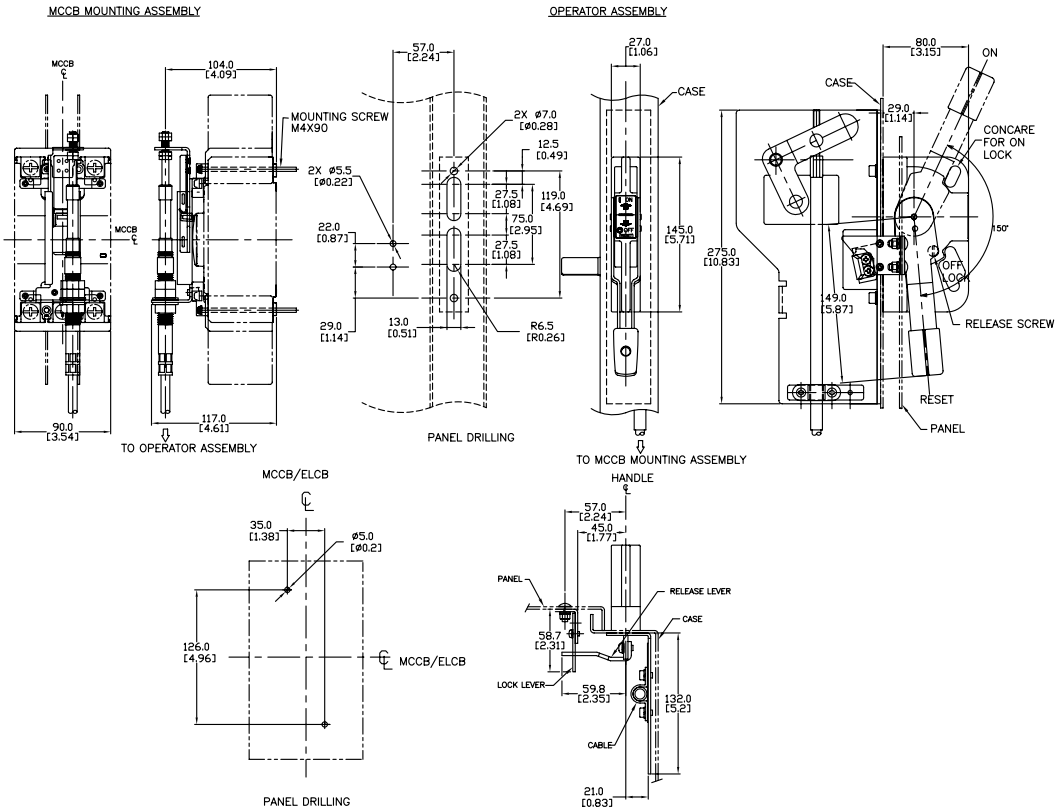

BW9F0GA

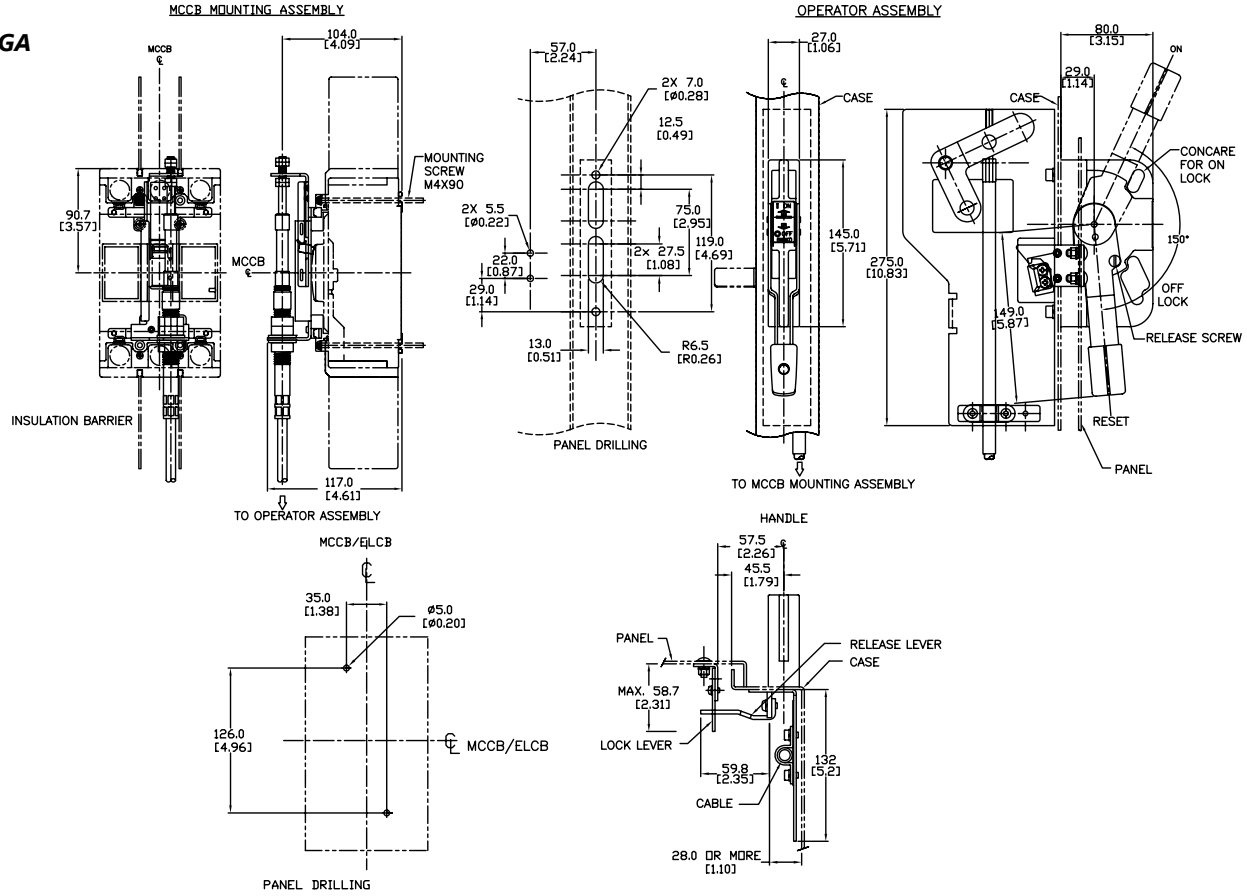

Fuji Molded Case Circuit Breakers
Field-mountable Accessories

Dimensions

mm [inches]

BW9F0HA

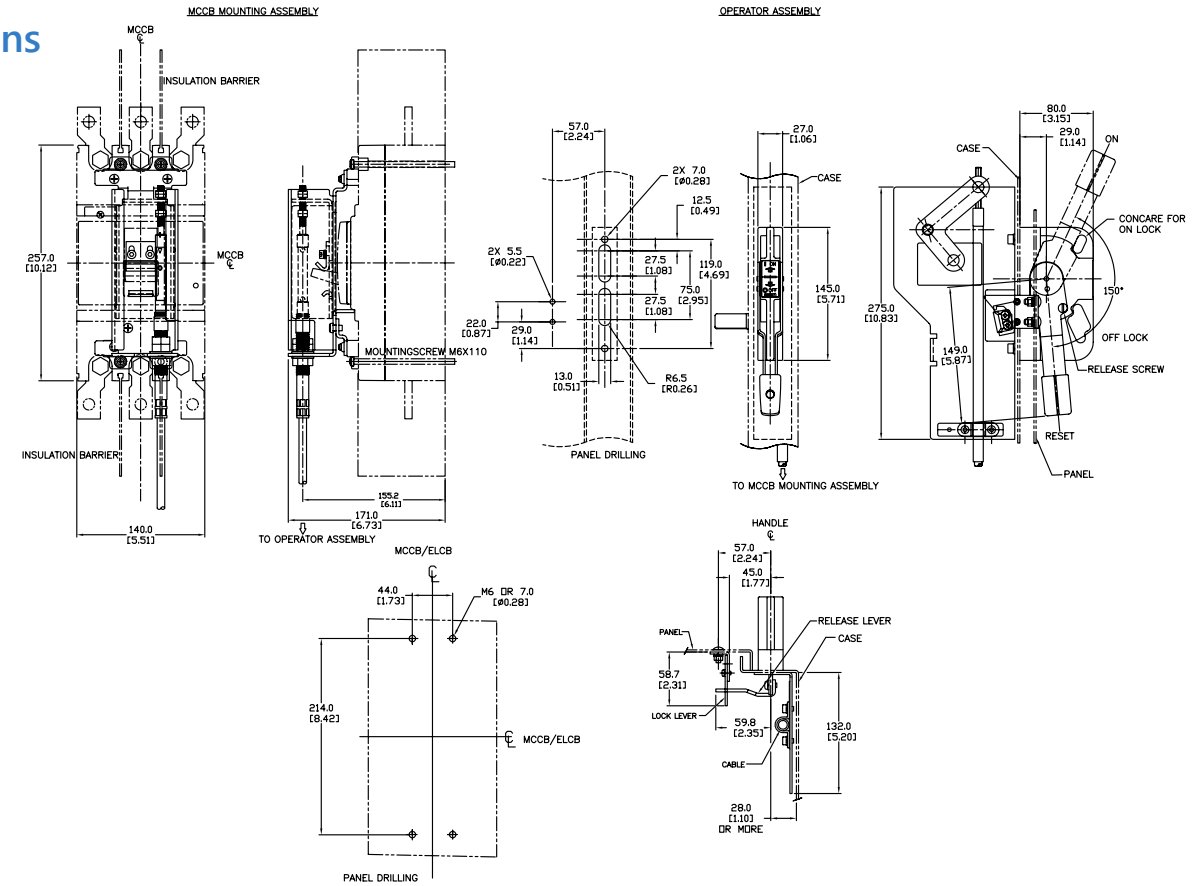

BW9F0JA

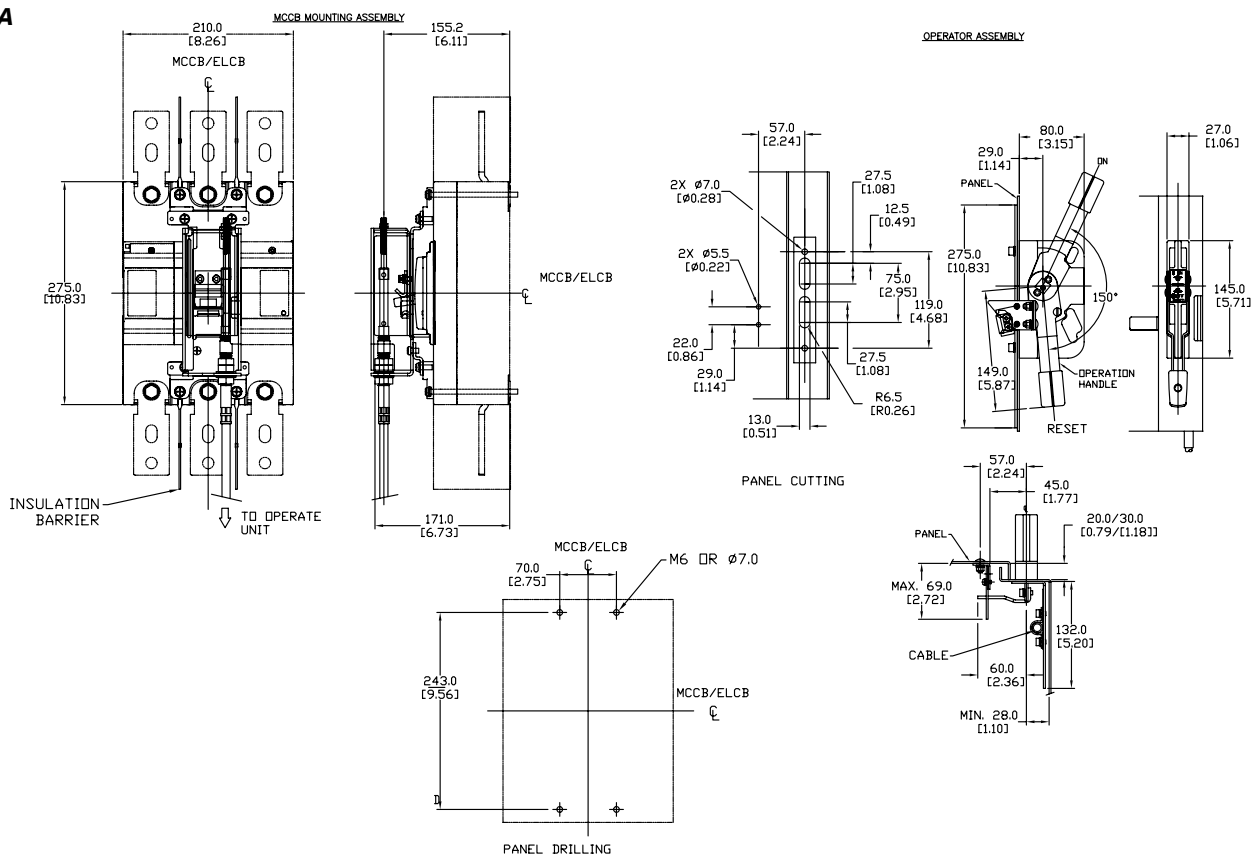

Fuji Molded Case Circuit Breakers Accessories

Fuji Electric
e-Front runners

Auxiliary Contacts

BW9W1SHA shown

The auxiliary contacts are accessory contacts for the indication of circuit breaker open-closed or tripped.

Auxiliary Contacts for Fuji MCCBs – Selection Guide

Breaker Type	Part Number	Price	Description
BW125 BW250	BW9W1SG0	$34.00	Auxiliary switch for for 125A and 250A frame. Mounting left and right side
BW400 BW630 BW800	BW9W1SHA	$31.00	Auxiliary switch for for 400A , 630A and 800A frame. Mounting left side ONLY

Ratings of Auxiliary Switches

Standard Type								
Breaker Type	Rated Thermal Current (A)	Make/Break Current (A)						Minimum Load Current
		AC			DC			
		Voltage (V)	Res. Load	Ind. Load	Voltage (V)	Res. Load	Ind. Load	
BW125, BW250, BW400 BW630, BW800	5	24	5	5	24	4	3	5V DC 160 mA 30V DC 30 mA
		48	5	5	48	2.5	1	
		125	5	3	125	0.4	0.4	
		250	3	2	250	0.2	0.2	

Operation of auxiliary switches

Accessory	Handle position		
	ON	OFF	Trip
Auxiiary switch SPDT (1)	11/AXcL — 14/AXaL 12/AXbL	11/AXcL — 14/AXaL 12/AXbL	

Shunt Trips

BW9FRG0 shown

Shunt Trip is for remote tripping (opening) of crircuit breaker.

Shunt Trips for Fuji MCCBs – Selection Guide

Part Number	Price	Description
BW9FRG0	$69.00	Field installable 24 VAC/VDC shunt trip for BW125 and BW250 series MCCB. Left and right side mounting. Lead wires 20AWG, 19.69" long.
BW9FHA-R	$69.00	Field installable 24/48 VAC/VDC shunt trip for BW400, BW630 and BW800 series MCCB. Left side mounting only. Lead wires 20AWG, 19.69" long.
BW9FAG0	$69.00	Field installable 100/120 VAC, 100-110 VDC shunt trip for BW125 and BW250 series MCCB. Left and right side mounting. Lead wires 20AWG, 19.69" long.
BW9FHA-A	$69.00	Field installable 100/240 VAC, 100-220 VDC shunt trip for BW400, BW630 and BW800 series MCCB.Left side mounting only. Lead wires 20AWG, 19.69" long.

Ratings of Shunt Trips

Breaker Type	AC		DC		Time Rating of Coil	Operating Time (ms)
	Voltage (V)	VA	Voltage (V)	W		
BW125, BW250	24	50	24	50	Continuous (with 1 N.O. contact to prevent coil burnout)	13-21
	100-120	50	100-110	50		
BW400, BW630, BW800	24-48	2	24-48	2	Continuous	8-20
	100-240	3	100-220	3		

Note: Allowable operating voltage AC voltage: 85% to 110% of coil rated voltage
DC voltage: 75% to 125% of coil rated voltage

Fuji Molded Case Circuit Breakers Accessories

Fuji Electric
e-Front runners

Undervoltage Releases

Undervoltage Release will trip the circuit breaker when the connected voltage drops to less than 70% of undervoltage release voltage rating. It will allow the circuit breaker to close (ON) when voltage is approximately 85% of rated voltage.

Undervoltage Releases for Fuji MCCBs – Selection Guide

Breaker Type	Part Number	Price	Description
BW125, BW250	BW9RGAR	$69.00	Undervoltage Release 24V DC (Left side ONLY)
BW125, BW250	BW9RGAT	$69.00	Undervoltage Release 110 to 130 VAC VAC/VDC (Left side ONLY)
BW400, BW630, BW800	BW9RHA-R	$67.00	Undervoltage Release 24 VAC/VDC (Left side ONLY)
BW400, BW630, BW800	BW9RHA-1	$69.00	Undervoltage Release 120 to 130 VAC 125 VDC (Left side ONLY)

BW9RGAR shown

Ratings of Undervoltage Trip

Breaker Type	AC		DC	
	Voltage (V)	VA	Voltage (V)	W
BW125*1 BW250*1	–	–	24	5
	110 - 130	5	–	–
BW400*2 BW630*2 BW800*2	24	2	24	2
	120 - 130	3	125	3

Note: Allowable operating voltage: AC voltage: 85% to 110% of coil rated voltage
DC voltage: 75% to 125% of coil rated voltage.

**1 Reset-allowed type: When the breaker handle is in the OFF or RESET state, tripping does not occur, even if the undervoltage trip coil is not energized.*
Turning ON with the undervoltage trip coil not energized causes normal tripping.
**2 Reset-prohibited type: When the undervoltage trip coil is not energized, reset operation cannot reset the tripped breaker to the OFF state.*

BW9SL0GA-3 shown

Replacement Lugs

Replacement Lug Kits for Fuji MCCBs – Selection Guide

Part Number	Price	Description
BW9SL0CA-3	$70.00	Replacement lug kit for BW125 series MCCB. 75°C. Cu only Package of 3
BW9SL0GA-3	$79.00	Replacement lug kit for BW250 series up to 175A MCCB. 75°C. Cu only Package of 3
BW9SL1GA-3	$87.00	Replacement lug kit for BW250 MCCB series 200A to 250A. 75°C. Cu only Package of 3

Note: Terminals are factory-installed only for BW400, BW630 and BW800 series. No replacement terminals available.

Fuji Molded Case Circuit Breakers Accessories

Terminal Covers

Terminal covers act as guards to shield the operator from touching live terminations. They fit either the line or load side.

***BW9BTHA-L3W* shown**

Terminal Covers for Fuji MCCBs – Selection Guide						
Breaker Type	***Part Number***	***Price***	***Description***	***Dimensions inch (mm)***		
				A	B	C
BW400	BW9BTHA-L3W	$69.00	Gray-white Long type terminal cover for Fuji MCCBs. For line side and load side. 2/pk	6.772 (172)	4.331 (110)	3.858 (98)
BW630, BW800	BW9BTJA-L3W	$72.00	Gray-white Long type terminal cover for Fuji MCCBs. For line side and load side. 2/pk	8.268 (210)	6.102 (155)	3.858 (98)

Note: Gray-white short type terminal covers are provided with breakers as standard for 125 and 250 Amp frames.

Dimensions of Terminal Covers: inch (mm)

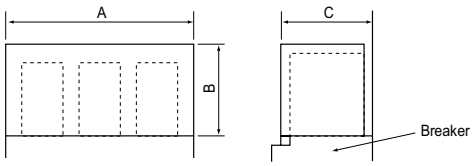

Lockout Attachment

Lockout Attachments for Fuji MCCBs – Selection Guide			
Breaker Type	***Part Number***	***Price***	***Description***
BW125 ***BW250***	BW9Q1CA	$16.50	Use to lock out BW125 and BW 250 series MCCBs. Lock not included
BW400, BW630, ***BW800***	BW9QNHA	$40.50	Use to lock out BW400, BW600 and BW800 MCCBs. Lock not included.

BW9Q1CA shown