ELKAY®
SPECIFICATIONS

ezH2O® In-Wall Bottle Filling Station with Mounting Frame Filtered Non-Refrigerated Stainless
Model LZWSMDK

PRODUCT SPECIFICATIONS

ezH2O® In-Wall Bottle Filling Station with Mounting Frame Filtered Non-Refrigerated Stainless. Features shall include Antimicrobial*, Filtered, Green Ticker™, Hands Free, Laminar Flow, Real Drain, Visual Filter Monitor. Electronic Bottle Filler Sensor activation. Product shall be Wall Mount (Inwall Frame/Plate), for Indoor applications, serving 1 station(s). Unit shall be certified to UL 399 and CAN/CSA C22.2 No. 120.

Special Features:	Antimicrobial, Filtered, Green Ticker™, Hands Free, Laminar Flow, Real Drain, Visual Filter Monitor
Finish:	Stainless Steel
Power:	115V/60Hz
Bubbler Style:	No Bubbler
Activation by:	Electronic Bottle Filler Sensor
Mounting Type:	Wall Mount (Inwall Frame/Plate)
Chilling Capacity:	Non-refrigerated
Full Load Amps	1
Rated Watts:	15
Dimensions (L x W x H):	19-3/4" x 3-1/2" x 40-13/16"
Approx. Shipping Weight:	36 lbs.
Installation Location:	Indoor
No. of Stations Served:	1

Special Note: Refrigerated options available.

- Visual Filter Monitor: LED Filter Status Indicator for when filter change is necessary.
- Standard Filter Included: Filter is tested and certified to NSF/ANSI 42, 53, 372 and 401 for the reduction of lead, microplastics, Class 1 particulate, cysts, and chlorine taste and odor. 3,000 gallon capacity or 1 year after installation.
- Green Ticker: Informs user of number of 20 oz. plastic water bottles saved from waste.
- Laminar flow provides clean fill with minimal splash.
- Key plastic components are manufactured with silver ion antimicrobial agent helping to provide clean, stain- and odor-free surfaces.
- Real Drain System eliminates standing water.

*Antimicrobial claims are in refence to components manufactured antimicrobial agents, helping to provide clean, stain- and odor-free surfaces.

Included with Product: **Bottle Filler (LZWSMDC), Mounting Frame (MFWS100), Filter (EWF3000)**

▼ Ships in multiple boxes.

A Century of Tradition and Quality.
For more than 100 years, Elkay has been making innovative products and providing exceptional customer care. We take pride in offering plumbing products that make life easier, inspire change and leave the world a better place.

PRODUCT COMPLIANCE

ADA & ICC A117.1

CAN/CSA C22.2 No. 120

GreenSpec®

NSF/ANSI 42, 53, 61 (Q≤1), 372 (lead free), & 401

UL 399

Complies with ADA & ICC A117.1 accessibility requirements when installed according to the requirements outlined in these standards. Installation may require additional components and/or construction features to be fully compliant. Consult the local Authority Having Jurisdiction if necessary.

Installation Instructions (PDF) - 98560C
Installation Instructions (PDF) - 98557C

Electrical components and water system are warranted for 12 months from date of installation. **Warranty pertains to drinking water applications only. Non-drinking water applications are not covered under warranty.**

Warranty (PDF)

PART:_____QTY: _____

PROJECT:_____

CONTACT:_____

DATE:_____

NOTES:_____

APPROVAL:_____

In keeping with our policy of continuing product improvement, Elkay reserves the right to change product specifications without notice. Please visit elkay.com for the most current version of Elkay product specification sheets. This specification describes an Elkay product with design, quality, and functional benefits to the user. When making a comparison of other producers' offerings, be certain these features are not overlooked.

Optional Accessories		
51300C	WaterSentry® Lead + Microplastics NSF/ANSI Certified 3000 Gal 12 Month Filter Spec Sheet (PDF)	
WSF6000R-2PK	WaterSentry 6000 CTO Replacement Filter (2pack) Spec Sheet (PDF)	

In keeping with our policy of continuing product improvement, Elkay reserves the right to change product specifications without notice. Please visit elkay.com for the most current version of Elkay product specification sheets. This specification describes an Elkay product with design, quality, and functional benefits to the user. When making a comparison of other producers' offerings, be certain these features are not overlooked.

OPERATION OF QUICK CONNECT FITTINGS

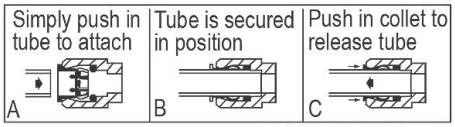

Pushing tube in before pulling it out helps to release tube

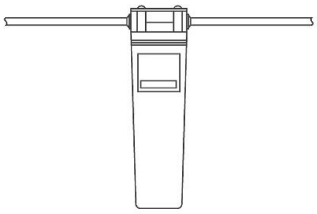

WaterSentry® Plus Filter System

IMPORTANT!
INSTALLER PLEASE NOTE:

The grounding of electrical equipment such as telephone, computers, etc., to water lines is a common procedure. This grounding may be in the building or may occur away from the building. This grounding can cause electrical feedback into a water cooler, creating an electrolysis which causes a metallic taste or causes an increase in the metal content of the water. This condition is avoidable by using the proper materials as indicated below. The drain fittings which are provided by the installer should also be plastic to electrically isolate the cooler from the building plumbing system
These products are designed to operate on 20 psi to 105 psi supply line pressure.

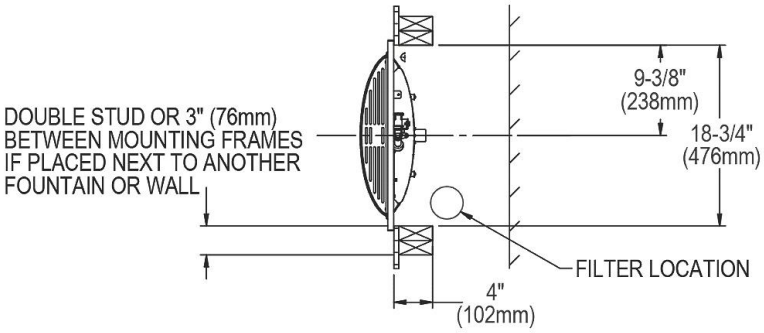

BOTTLE FILLER SPECIFICATIONS

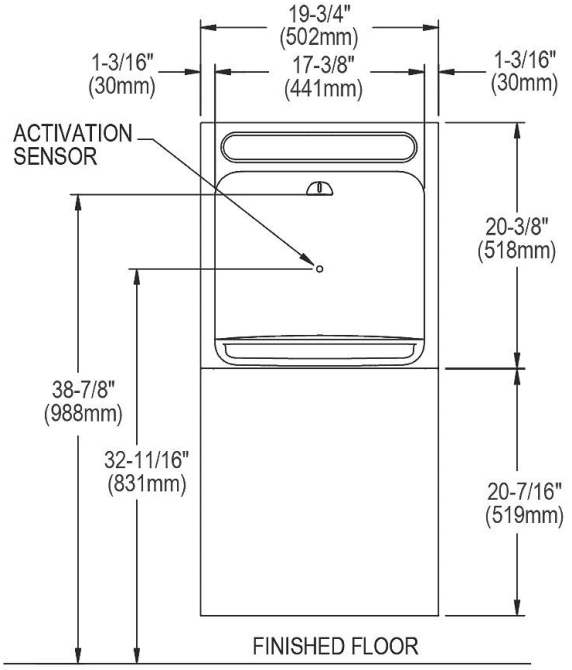

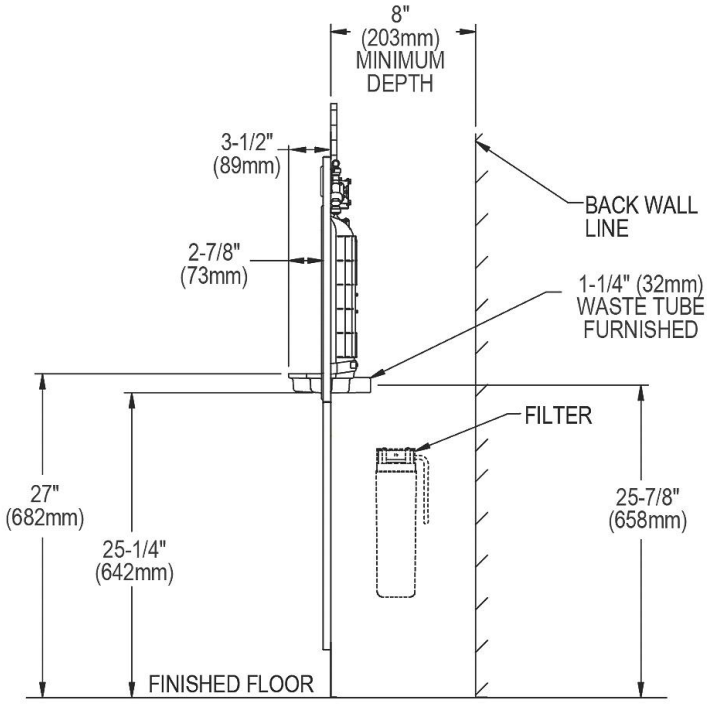

Note : New Installations Must Use Ground Fault Circuit Interrupter (GFCI).
It is highly recommended that the circuit be dedicated and the load protection be sized for 20 amps.

In keeping with our policy of continuing product improvement, Elkay reserves the right to change product specifications without notice. Please visit elkay.com for the most current version of Elkay product specification sheets. This specification describes an Elkay product with design, quality, and functional benefits to the user. When making a comparison of other producers' offerings, be certain these features are not overlooked.

MOUNTING FRAME MFWS100 WITHOUT CHILLER SHELF

IMPORTANT!
INSTALLER PLEASE NOTE:
The grounding of electrical equipment such as telephone, computers, etc., to water lines is a common procedure. This grounding may be in the building or may occur away from the building. This grounding can cause electrical feedback into a water cooler, creating an electrolysis which causes a metallic taste or causes an increase in the metal content of the water. This condition is avoidable by using the proper materials as indicated below. The drain fittings which are provided by the installer should also be plastic to electrically isolate the cooler from the building plumbing system.

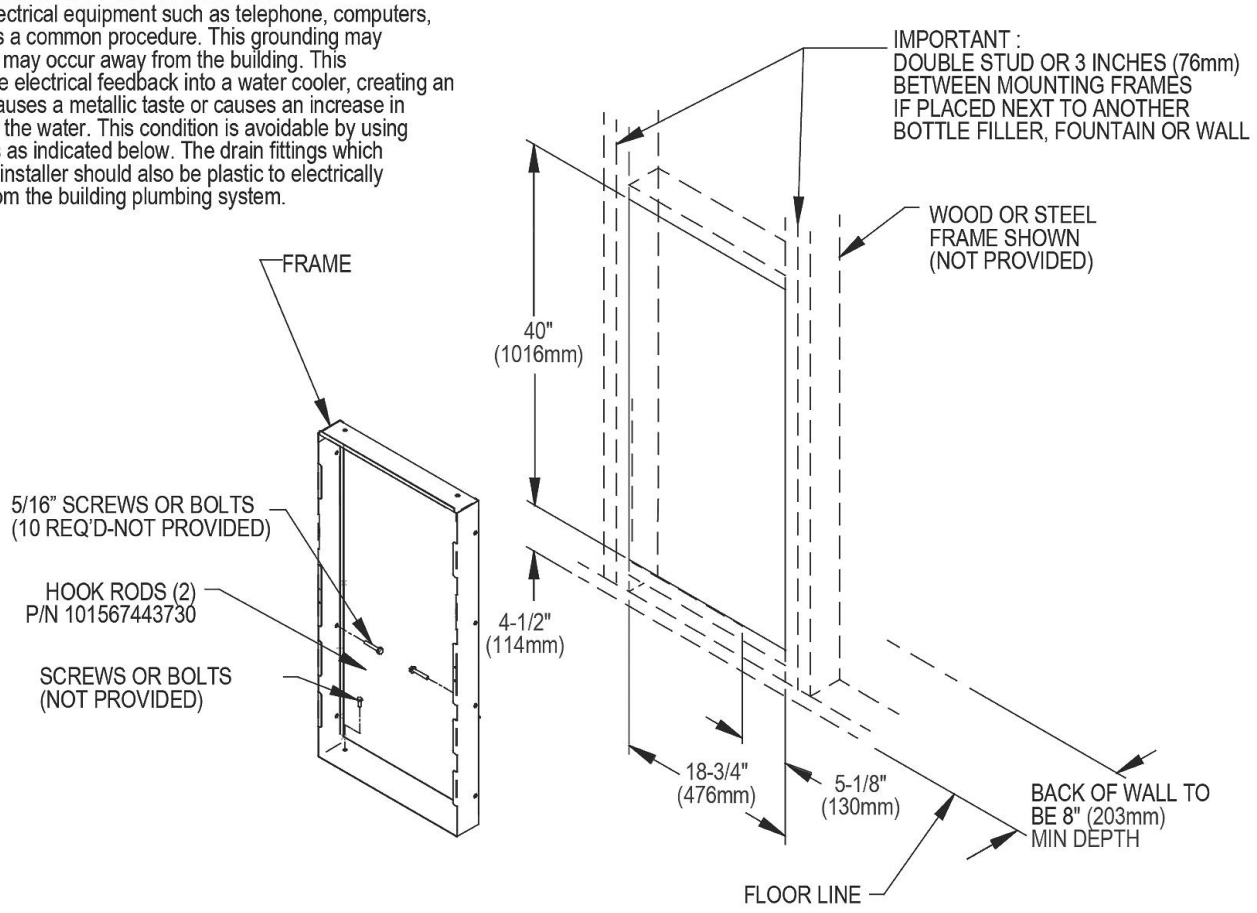

In keeping with our policy of continuing product improvement, Elkay reserves the right to change product specifications without notice. Please visit elkay.com for the most current version of Elkay product specification sheets. This specification describes an Elkay product with design, quality, and functional benefits to the user. When making a comparison of other producers' offerings, be certain these features are not overlooked.