Conventional and Addressable Accessories
Bell Strobe Adaptors
2400 Series

The Edwards 2400 Series Bell/Strobe Adaptor Plate contains a 30, 15/75, or 110 candela strobe. The unit is specifically designed for use with the 439D-AW-R series of 6" (152mm), 8" (203mm) and 10" (254mm) red fire alarm bells (ordered separately).

The strobes are designed to flash at the same rate (synchronize) when used with a compatible sychronization source, such as the EG1M-RM synchronization module, E-FSC and E-FSA fire panels, and EBPS series booster supplies. Wire leads are provided for easy installation of the strobe. The units are suitable for indoor use. The strobes require a continuous (non-pulsed) DC source.

The 2400 Series is designed for indoor wall mounting on a variety of standard, flush mounted, North-American electrical boxes.

Features and Specifications

- Available in red
- Clear Lexan lens (strobe)
- Low current draw synchronous strobe
- 60 flashes per minute (fpm)
- Marked "FIRE" on both sides
- Strobe: UL 1971 Listed for the Hearing Impaired; UL 1638
- Meets NFPA and ADA requirements
- Operating temperature range: 32ºF to 120ºF (0°C to 49°C)

Ordering Information

Description	Cat. No.	Strobe Operating Voltage[1]	Candela Rating	Current
Bell Strobe Adapters	**2453BSA-15/75-R**	24V (Continuous)	15/75 cd Wall	0.150 A DC, 0.210 A fwr

[1]Regulated 16V to 33V DC/fwr.

Accessories

Description	Cat. No.
Synchronization Module	**EG1M-RM**

DC

120°F 32°F OP TEMP

XENON

Conventional and Addressable Accessories
Bell Strobe Adaptors
2400 Series

Weights and Dimensions
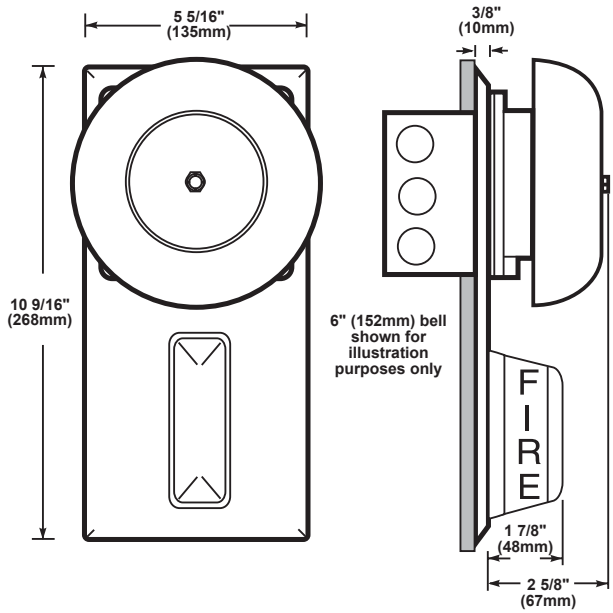
Cat. No.	Approx. Shipping Weight (lb.)
2453BSA-15/75-R	1.6