Customer information packet

VM3538-57

.5HP, 1425RPM, 3PH, 50HZ, 56C, 3420M, TEFC, F1
Class - None
Division - Not Applicable

Copyright © All product information within this document is subject to ABB Motors and Mechanical Inc. copyright © protection, unless otherwise noted.
6/9/2025 3:56:04 AM

Specifications

Enclosure	TEFC
Frame	56C
Frame Material	Steel
Frequency	50.00 Hz
Haz Area Class and Group	None
Haz Area Division	Not Applicable
Motor Letter Type	Three Phase
Output @ Frequency	.500 HP @ 50 HZ
Phase	3
Synchronous Speed @ Frequency	1500 RPM @ 50 HZ
Voltage @ Frequency	400.0 V @ 50 HZ
	230.0 V @ 50 HZ
Agency Approvals	CE
	CSA
	UR
	WEEE
Ambient Temperature	40 °C
Auxillary Box	No Auxillary Box
Auxillary Box Lead Termination	None
Base Indicator	No Mounting
Bearing Grease Type	Polyrex EM (-20F +300F)
Blower	None
Current @ Voltage	1.000 A @ 400.0 V
	1.700 A @ 230.0 V
Design Code	B
Drip Cover	No Drip Cover
Duty Rating	CONT
Efficiency @ 100% Load	73.0 %
Electrically Isolated Bearing	Not Electrically Isolated
Feedback Device	NO FEEDBACK
Front Face Code	Standard
Front Shaft Indicator	None

Part detail

Revision	T
Type	AC
Mech. spec.	34A063
Base	
Status	PRD/A
Elec. spec.	34WGX268
Layout	34LYA063
Eff. date	02-10-2025
CD Diagram	CD0022
Poles	04
Leads	6#18
Proprietary	False
Created date	09-07-2011

Heater Indicator	No Heater
High Voltage Full Load Amps	1.0 a
Insulation Class	B
Inverter Code	Not Inverter
KVA Code	K
Lifting Lugs	No Lifting Lugs
Locked Bearing Indicator	Locked Bearing
Motor Lead Exit	Ko Box
Motor Lead Quantity/Wire Size	6 @ 18 AWG
Motor Lead Termination	Flying Leads
Motor Standards	NEMA
Motor Type	3420M
Mounting Arrangement	F1
Number of Poles	4
Overall Length	11.35 IN
Power Factor	67
Product Family	General Purpose
Pulley End Bearing Type	Ball
Pulley Face Code	C-Face
Pulley Shaft Indicator	Standard
Rodent Screen	None
RoHS Status	ROHS COMPLIANT
Service Factor	1.25
Shaft Diameter	0.625 IN
Shaft Extension Location	Pulley End
Shaft Ground Indicator	No Shaft Grounding
Shaft Rotation	Reversible
Shaft Slinger Indicator	No Slinger
Speed	1425 rpm
Speed Code	Single Speed
Starting Method	Direct on line
Thermal Device - Bearing	None
Thermal Device - Winding	None
Vibration Sensor Indicator	No Vibration Sensor

Winding Thermal 1	None
Winding Thermal 2	None

Nameplate

NP1372L								
CAT.NO.	VM3538-57							
SPEC.	34A063X268G2							
HP	.5 /KW .37							
VOLTS	230/400							
AMP	1.7/1 SFA 2/1.2							
R.P.M. (1/MIN)	1425							
FRAME	56C		**HZ**	50			**PH**	3
SER.F.	1.25	**CODE**	K	**DES**	B	**CL**	B	
NEMA-NOM-EFF	73	**PF**	67					
RATING	40C AMB-S1 CONT							
CC			IP44 KG11 IC411					
DE	6203		**ODE**	6203				
ENCL	TEFC	**SN**						
	IE2-71.8(75%)66.3(50%)							

AC Induction Motor Performance Data
Record # 35147
Typical performance - not guaranteed values

Winding: 34WGX268-R008 **Type:** 3420M **Enclosure:** TEFC

Nameplate Data			
Rated Output (HP)			.5
Volts			230/400
Full Load Amps			1.7/1
R.P.M.			1425
Hz	50	**Phase**	3
NEMA Design Code	B	**KVA Code**	K
Service Factor (S.F.)			1.25
NEMA Nom. Eff.	73	**Power Factor**	67
Rating - Duty			40C AMB-CONT
S.F. Amps			2/1.2

400 V, 50 Hz: High Voltage Connection	
Full Load Torque	1.8 LB-FT
Start Configuration	direct on line
Breakdown Torque	6.97 LB-FT
Pull-up Torque	5.9 LB-FT
Locked-rotor Torque	6.96 LB-FT
Starting Current	6.31 A
No-load Current	0.704 A
Line-line Res. @ 25ºC	27.1 Ω
Temp. Rise @ Rated Load	44°C
Temp. Rise @ S.F. Load	55°C
Locked-rotor Power Factor	64
Rotor inertia	0.0476 LB-FT2

Load Characteristics 400 V, 50 Hz, 0.5 HP

% of Rated Load	25	50	75	100	125	150	S.F.
Power Factor	35	50	62	69	77	80	77
Efficiency	52.4	66.3	71.8	73.3	73.9	73.1	73.9
Speed	1479	1465	1448	1418	1406	1374	1406
Line amperes	0.749	0.819	0.901	1.04	1.15	1.31	1.15

ABB Motors and Mechanical Inc.

WINDING # 34WGX268

Typical performance - not guaranteed values.

0.5 HP 3 PH 50 HZ 1425 RPM 400 V 3420M

TORQUES(LB-FT): PO=6.97 PU=5.9 LR=6.96 LRA=6.31

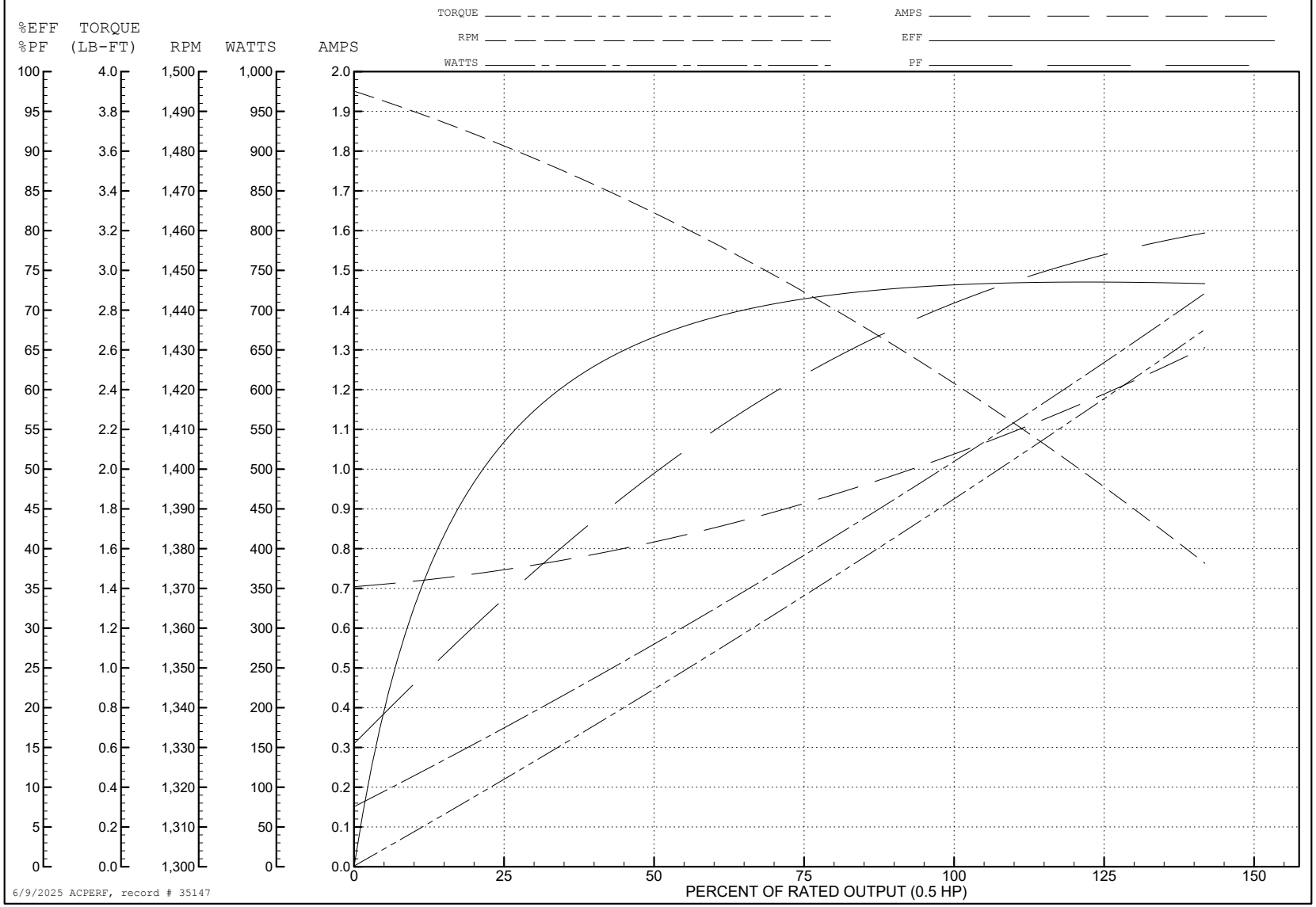

34LYA063

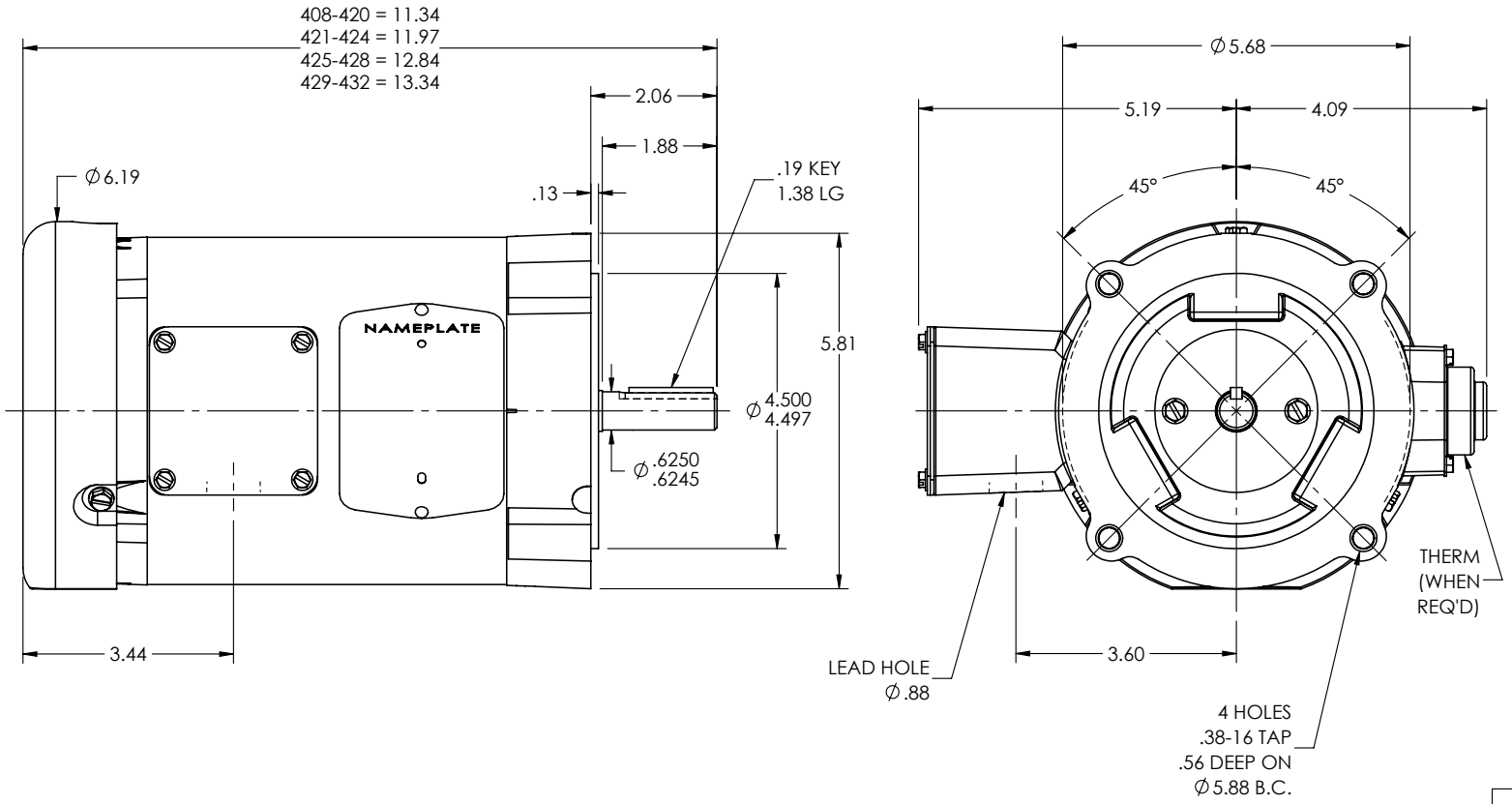

CUSTOMER IS RESPONSIBLE FOR DETERMINING THAT THE PRODUCT WILL PERFORM SUITABLY IN THE INTENDED APPLICATION

REV. DESC: CLEAN UP DIMENSIONING			
REV: P	VERSION: 05	REVISED: 08:51:08 10/31/2024	TDR: 000001243684
34LYA063	MODEL NO. 34LYA063		REF: -
	BY: ENJEFD0		

BALDOR - RELIANCE®

STD VERT 34M NEMA 56C TEFC

34LYA063

CD0022

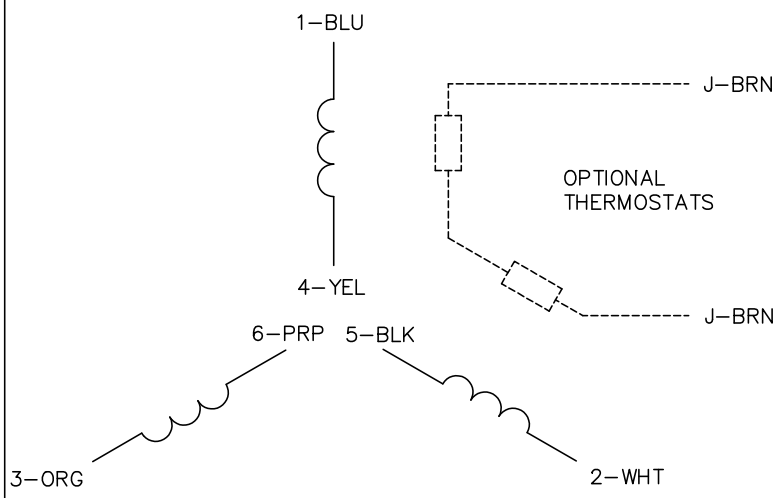

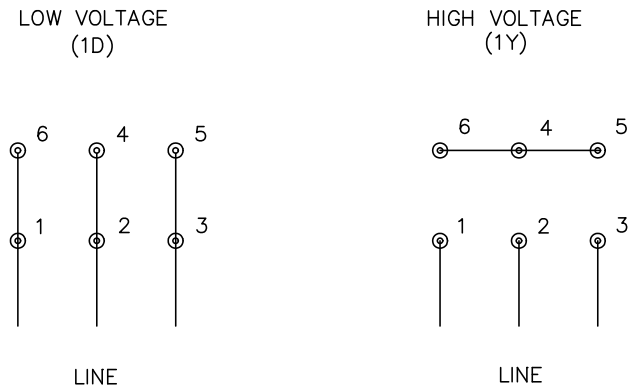

NOTES:

1. INTERCHANGE ANY TWO LINE LEADS TO REVERSE ROTATION.
2. OPTIONAL THERMOSTATS ARE PROVIDED WHEN SPECIFIED.
3. ACTUAL NUMBER OF INTERNAL PARALLEL CIRCUITS MAY BE A MULTIPLE OF THOSE SHOWN ABOVE.
4. LEAD COLORS ARE OPTIONAL. LEADS MUST ALWAYS BE NUMBERED AS SHOWN.

REV. DESC: REVISE TO SHOW OPTIONAL COLORS			
REV. LTR: F	BY: JLP	REVISED: 01/21/99 3:54	TDR: 0171435
CD0022		FILE: AAA00005144	MDL: –
		MTL: –	

BALDOR ELECTRIC Co.

3PH, DV, 6 LEADS, DELTA/WYE CONNECTION

CD0022