Customer information packet

L3514M

1.5HP, 1725RPM, 1PH, 60HZ, 56H, 3532LC, TEFC, F
Class - None
Division - Not Applicable

Copyright © All product information within this document is subject to ABB Motors and Mechanical Inc. copyright © protection, unless otherwise noted.
6/9/2025 4:07:02 AM

Specifications

Enclosure	TEFC
Frame	56H
Frame Material	Steel
Frequency	60.00 Hz
Haz Area Class and Group	None
Haz Area Division	Not Applicable
Motor Letter Type	Cap Start, Cap Run
Output @ Frequency	1.500 HP @ 60 HZ
Phase	1
Synchronous Speed @ Frequency	1800 RPM @ 60 HZ
Voltage @ Frequency	230.0 V @ 60 HZ 208.0 V @ 60 HZ 115.0 V @ 60 HZ
Agency Approvals	C UR US
Ambient Temperature	40 °C
Auxillary Box	No Auxillary Box
Auxillary Box Lead Termination	None
Base Indicator	Rigid
Bearing Grease Type	Polyrex EM (-20F +300F)
Blower	None
Current @ Voltage	6.200 A @ 208.0 V 5.500 A @ 230.0 V 12.200 A @ 115.0 V
Design Code	L
Drip Cover	No Drip Cover
Duty Rating	CONT
Efficiency @ 100% Load	80.0 %
Electrically Isolated Bearing	Not Electrically Isolated
Feedback Device	NO FEEDBACK
Front Shaft Indicator	None
Heater Indicator	No Heater
High Voltage Full Load Amps	5.5 a

Part detail

Revision	D
Type	AC
Mech. spec.	35H611
Base	
Status	PRD/A
Elec. spec.	35WGG398
Layout	35LYH611
Eff. date	05-21-2025
CD Diagram	CD0016A02
Poles	04
Leads	7#18,1#16 #4TH
Proprietary	False
Created date	02-23-2023

Insulation Class	F
Inverter Code	Not Inverter
KVA Code	H
Lifting Lugs	No Lifting Lugs
Locked Bearing Indicator	No Locked Bearing
Motor Lead Quantity/Wire Size	7 @ 18 AWG
Motor Lead Termination	Flying Leads
Motor Standards	NEMA
Motor Type	3532LC
Mounting Arrangement	F1
Number of Poles	4
Overall Length	13.81 IN
Power Factor	90
Product Family	General Purpose
Pulley End Bearing Type	Ball
Pulley Face Code	Standard
Pulley Shaft Indicator	Standard
Rodent Screen	None
Service Factor	1.00
Shaft Diameter	0.625 IN
Shaft Ground Indicator	No Shaft Grounding
Shaft Rotation	Reversible
Shaft Slinger Indicator	No Slinger
Speed	1725 rpm
Speed Code	Single Speed
Starting Method	Direct on line
Thermal Device - Bearing	None
Thermal Device - Winding	Do Not Use
Vibration Sensor Indicator	No Vibration Sensor
Winding Thermal 1	Manual Thermal Overload
Winding Thermal 1 Location	SB
Winding Thermal 2	None

Nameplate

NP1257L								
CAT.NO.	L3514M							
SPEC.	35H611G398							
HP	1.5							
VOLTS	115/208-230							
AMP	12.2/6.2-5.5							
RPM	1725							
FRAME	56H			**HZ**	60		**PH**	1
SER.F.	1.00	**CODE**	H	**DES**	L	**CL**	F	
NEMA-NOM-EFF	80	**PF**	90					
RATING	40C AMB-CONT							
CC								
DE	6205	**ODE**	6203					
ENCL	TEFC	**SN**						

Accessories

Part number	Description	Multiplier
35-8762	C FACE KIT	A8
35EP1506A01SP	D-FLANGE KIT	A8

AC Induction Motor Performance Data
Record # 89151
Typical performance - not guaranteed values

Winding: 35WGG398-R001	**Type:** 3532LC	**Enclosure:** TEFC

Nameplate Data			**230 V, 60 Hz: High Voltage Connection**	
Rated Output (HP)		1.5	**Full Load Torque**	4.56 LB-FT
Volts		115/208-230	**Start Configuration**	direct on line
Full Load Amps		13.4/6.8-6.7	**Breakdown Torque**	9.9 LB-FT
R.P.M.		1725	**Pull-up Torque**	8.06 LB-FT
Hz	60 **Phase**	1	**Locked-rotor Torque**	12.98 LB-FT
NEMA Design Code	L **KVA Code**	H	**Starting Current**	43.97 A
Service Factor (S.F.)		1	**No-load Current**	0.877 A
NEMA Nom. Eff.	80 **Power Factor**	90	**Line-line Res. @ 25ºC**	0.517 Ω A Ph 1.32 Ω B Ph
Rating - Duty		40C AMB-CONT	**Temp. Rise @ Rated Load**	67°C
			Locked-rotor Power Factor	91.1
			Rotor inertia	0.232 lb-ft²

Load Characteristics 230 V, 60 Hz, 1.5 HP

% of Rated Load	**25**	**50**	**75**	**100**	**125**	**150**
Power Factor	95	98	98	98	97	96
Efficiency	68.1	80.4	82.5	81.1	76.9	69.8
Speed	1782	1765	1746	1723	1690	1641
Line amperes	1.83	3.08	4.5	6.1	8.12	10.79

ABB Motors and Mechanical Inc.

WINDING # 35WGG398

Typical performance - not guaranteed values.

1.5 HP 1 PH 60 HZ 1725 RPM 230 V 3532LC

TORQUES(LB-FT): PO=9.9 PU=8.06 LR=12.98 LRA=43.97

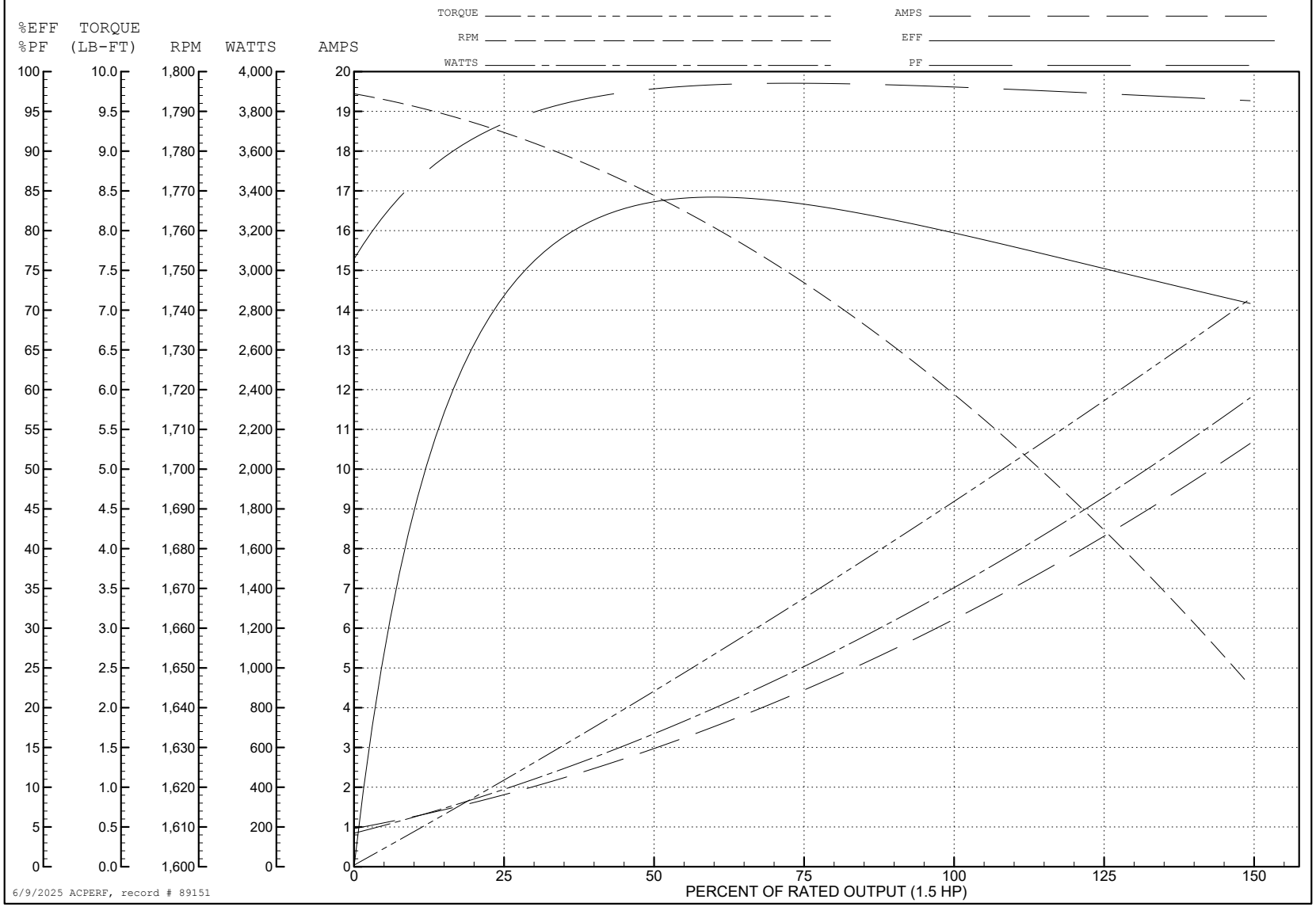

6/9/2025 ACPERF, record # 89151

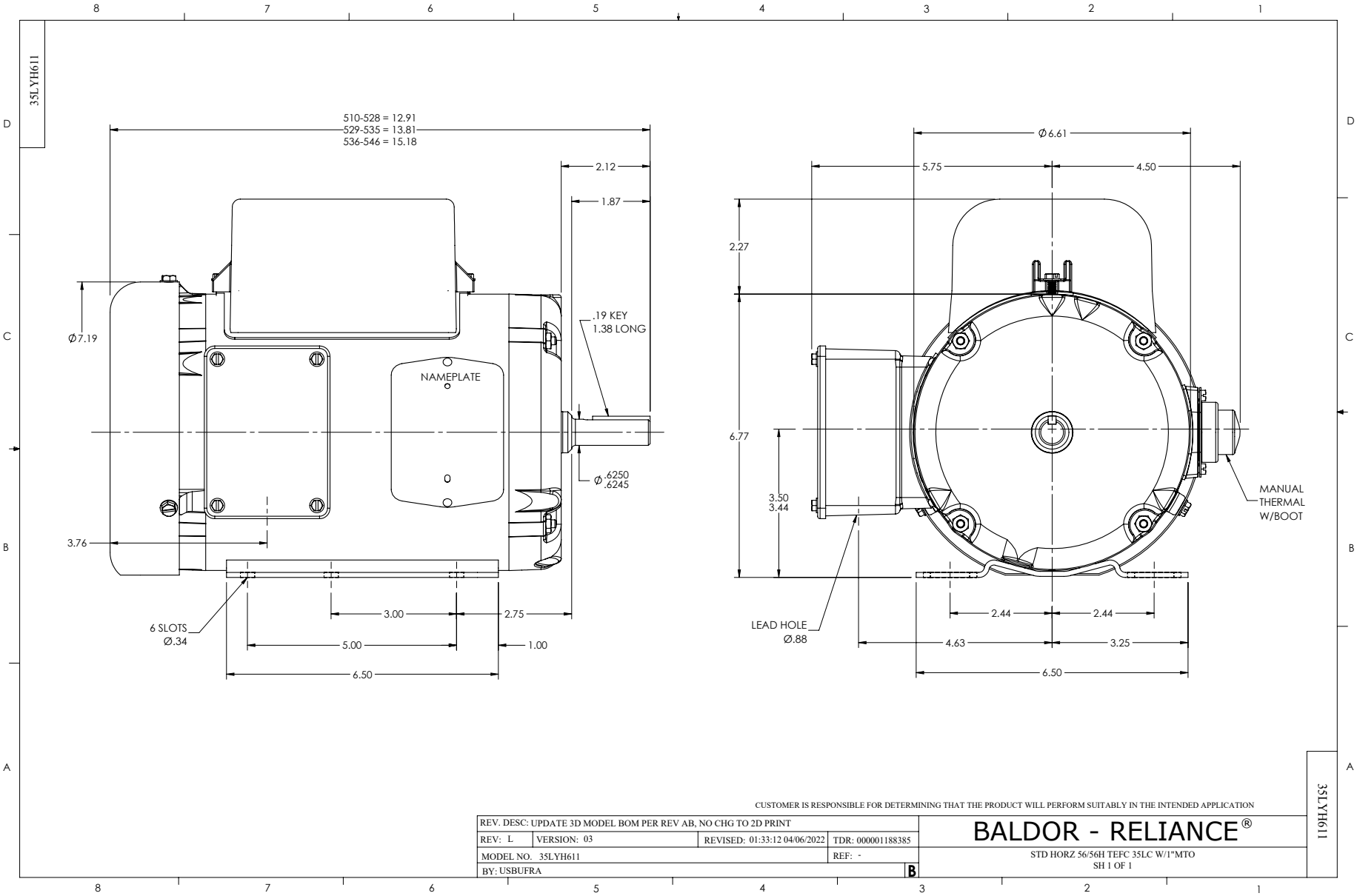
35LYH611
510-528 = 12.91
529-535 = 13.81
536-546 = 15.18
2.12
1.87
Ø7.19
.19 KEY
1.38 LONG
NAMEPLATE
Ø .6250
.6245
3.76
6 SLOTS
Ø.34
3.00
2.75
5.00
1.00
6.50
Ø6.61
5.75
4.50
2.27
6.77
3.50
3.44
MANUAL
THERMAL
W/BOOT
LEAD HOLE
Ø.88
2.44
2.44
4.63
3.25
6.50
CUSTOMER IS RESPONSIBLE FOR DETERMINING THAT THE PRODUCT WILL PERFORM SUITABLY IN THE INTENDED APPLICATION
REV. DESC: UPDATE 3D MODEL BOM PER REV AB, NO CHG TO 2D PRINT
REV: L
VERSION: 03
REVISED: 01:33:12 04/06/2022
TDR: 000001188385
MODEL NO. 35LYH611
REF: -
BY: USBUFRA
B
BALDOR - RELIANCE®
STD HORZ 56/56H TEFC 35LC W/1"MTO
SH 1 OF 1
35LYH611

CD0016A02

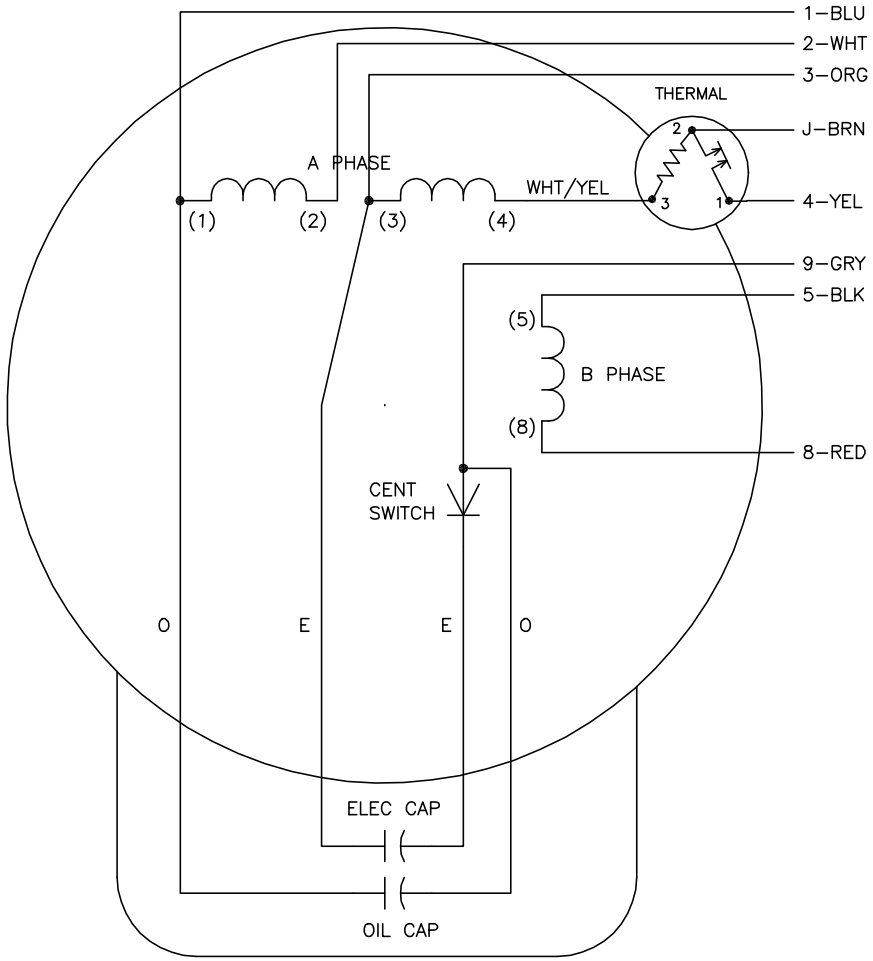

	LINE A	LINE B	JOIN	JOIN	JOIN
HIGH STD	1	4	2,3	8,9	J,5
HIGH OPP	1	4	2,3	5,9	J,8
LOW STD	1,3	4	8,9	2,J,5	–
LOW OPP	1,3	4	5,9	2,J,8	–

NOTES:

1. STANDARD ROTATION IS CCW FACING END OPPOSITE SHAFT EXTENSION.
2. MULTIPLE CAPACITORS ARE CONNECTED IN PARALLEL UNLESS OTHERWISE SPECIFIED.
3. LEAD COLORS ARE OPTIONAL. LEADS MUST ALWAYS BE NUMBERED AS SHOWN.

REV. DESC: REMOVE OPTIONAL THERMAL CONNECTION			BALDOR ELECTRIC Co.
REV. LTR: F	VERSION: 01	TDR: 000000373039	
CD0016A02	FILE: \AAA\00007\411	REVISED: 10:13:25 08/11/2005	TYPE LC, DV, REV, OIL CAP ACR. LINE, THERMAL, 8 LEADS
	MTL: –	BY: ENJOEPO	

CD0016A02