Customer information packet

L3505

.5HP, 1145RPM, 1PH, 60HZ, 56H, 3526L, TEFC, F1
Class - None
Division - Not Applicable

Copyright © All product information within this document is subject to ABB Motors and Mechanical Inc. copyright © protection, unless otherwise noted.
6/9/2025 4:06:22 AM

Specifications

Enclosure	TEFC
Frame	56H
Frame Material	Steel
Frequency	60.00 Hz
Haz Area Class and Group	None
Haz Area Division	Not Applicable
Motor Letter Type	Cap Start, Induction Run
Output @ Frequency	.500 HP @ 60 HZ
Phase	1
Synchronous Speed @ Frequency	1200 RPM @ 60 HZ
Voltage @ Frequency	115.0 V @ 60 HZ
	230.0 V @ 60 HZ
Agency Approvals	CSA
	UR
Ambient Temperature	40 °C
Auxillary Box	No Auxillary Box
Auxillary Box Lead Termination	None
Base Indicator	Rigid
Bearing Grease Type	Polyrex EM (-20F +300F)
Blower	None
Current @ Voltage	8.000 A @ 115.0 V
	4.000 A @ 230.0 V
Design Code	N
Drip Cover	No Drip Cover
Duty Rating	CONT
Efficiency @ 100% Load	62.0 %
Electrically Isolated Bearing	Not Electrically Isolated
Feedback Device	NO FEEDBACK
Front Shaft Indicator	None
Heater Indicator	No Heater
High Voltage Full Load Amps	4.0 a
Insulation Class	F

Part detail

Revision	C
Type	AC
Mech. spec.	35J383
Base	
Status	PRD/A
Elec. spec.	35WGG379
Layout	35LYJ383
Eff. date	07-01-2024
CD Diagram	CD0001
Poles	06
Leads	6#18
Proprietary	False
Created date	02-23-2023

Inverter Code	Not Inverter
KVA Code	F
Lifting Lugs	No Lifting Lugs
Locked Bearing Indicator	No Locked Bearing
Motor Lead Quantity/Wire Size	6 @ 18 AWG
Motor Lead Termination	Flying Leads
Motor Standards	NEMA
Motor Type	3526L
Mounting Arrangement	F1
Number of Poles	6
Overall Length	12.91 IN
Power Factor	70
Product Family	General Purpose
Pulley End Bearing Type	Ball
Pulley Face Code	Standard
Pulley Shaft Indicator	Standard
Rodent Screen	None
Service Factor	1.25
Shaft Diameter	0.625 IN
Shaft Ground Indicator	No Shaft Grounding
Shaft Rotation	Reversible
Shaft Slinger Indicator	No Slinger
Speed	1145 rpm
Speed Code	Single Speed
Starting Method	Direct on line
Thermal Device - Bearing	None
Thermal Device - Winding	None
Vibration Sensor Indicator	No Vibration Sensor
Winding Thermal 1	None
Winding Thermal 2	None

Nameplate

NP1256L								
CAT.NO.	L3505							
SPEC.	35J383G379G1							
HP	.5							
VOLTS	115/230							
AMP	8/4							
RPM	1145							
FRAME	56H		**HZ**	60			**PH**	1
SER.F.	1.25	**CODE**	F	**DES**	N	**CLASS**		F
NEMA-NOM-EFF	62	**PF**	70					
RATING	40C AMB-CONT							
CC								
DE	6205		**ODE**	6203				
ENCL	TEFC	**SN**						
	SFA 8.8/4.4							

Accessories

Part number	Description	Multiplier
35-8762	C FACE KIT	A8
35EP1506A01SP	D-FLANGE KIT	A8

AC Induction Motor Performance Data
Record # 91089
Preliminary Data Sheet

Winding: 35WGG379-R002	**Type:** 3526L	**Enclosure:** TEFC

Nameplate Data			**115 V, 60 Hz: Low Voltage Connection**	
Rated Output (HP)		.5	**Full Load Torque**	2.27 LB-FT
Volts		115/230	**Start Configuration**	direct on line
Full Load Amps		8/4	**Breakdown Torque**	4.64 LB-FT
R.P.M.		1145	**Pull-up Torque**	5.21 LB-FT
Hz	60 **Phase**	1	**Locked-rotor Torque**	9.35 LB-FT
NEMA Design Code	N **KVA Code**	F	**Starting Current**	28.22 A
Service Factor (S.F.)		1.25	**No-load Current**	6.12 A
NEMA Nom. Eff.	62 **Power Factor**	70	**Line-line Res. @ 25ºC**	1.65 Ω A Ph 1.71 Ω B Ph
Rating - Duty		40C AMB-CONT	**Temp. Rise @ Rated Load**	61°C
S.F. Amps		8.8/4.4	**Temp. Rise @ S.F. Load**	75°C
			Locked-rotor Power Factor	100
			Rotor inertia	0.188 lb-ft²

Load Characteristics 115 V, 60 Hz, 0.5 HP

% of Rated Load	**25**	**50**	**75**	**100**	**125**	**150**	**S.F.**
Power Factor	33	45	55	63	70	75	70
Efficiency	41.2	56.2	63.3	65.7	65.6	62.5	65.6
Speed	1189	1180	1171	1159	1146	1125	1146
Line amperes	6.09	6.45	7.03	7.83	8.84	10.39	8.84

ABB Motors and Mechanical Inc.

WINDING # 35WGG379

Typical performance - not guaranteed values.

0.5 HP 1 PH 60 HZ 1145 RPM 115 V 3526L

TORQUES(LB-FT): PO=4.64 PU=5.21 LR=9.35 LRA=28.22

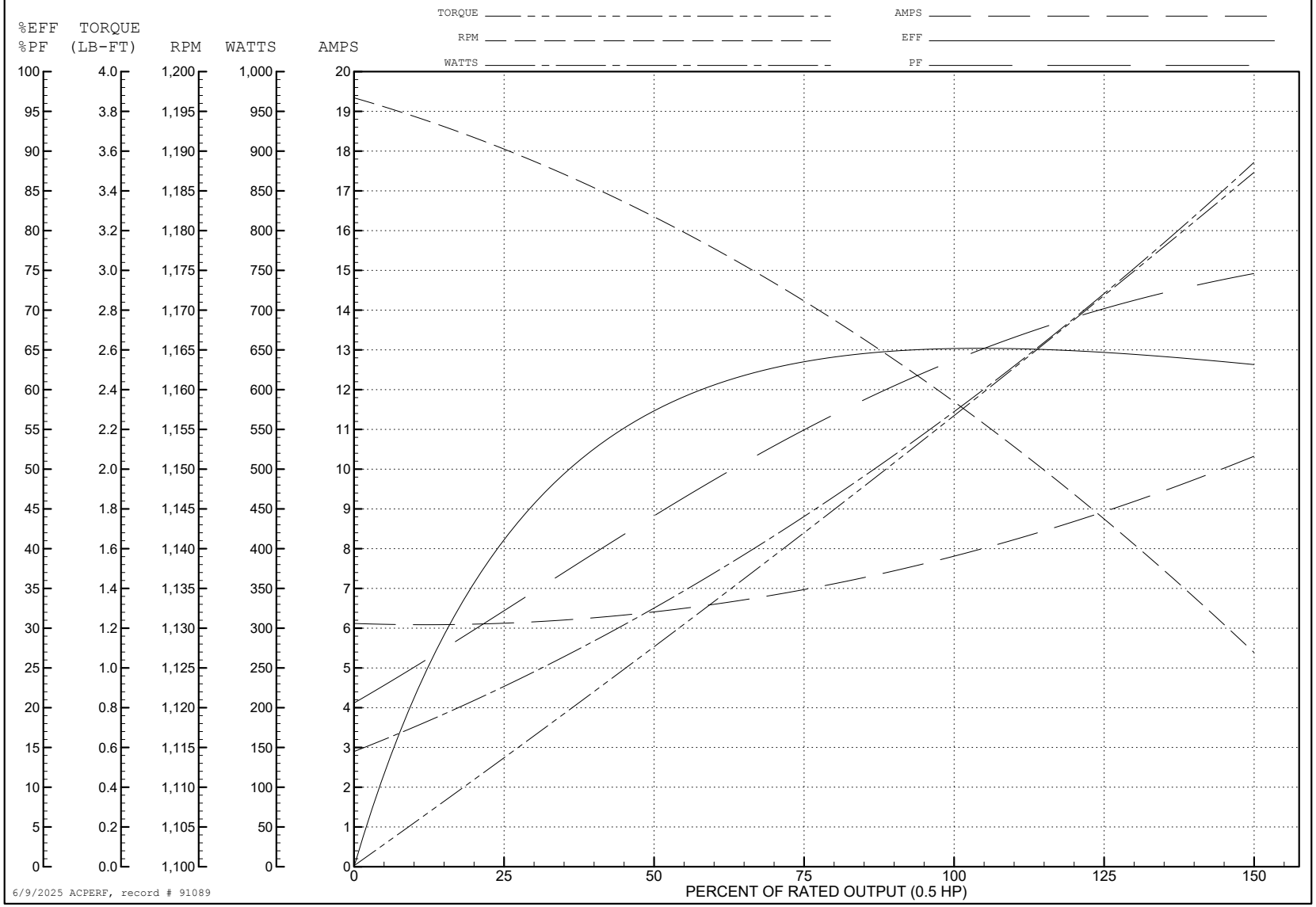

6/9/2025 ACPERF, record # 91089

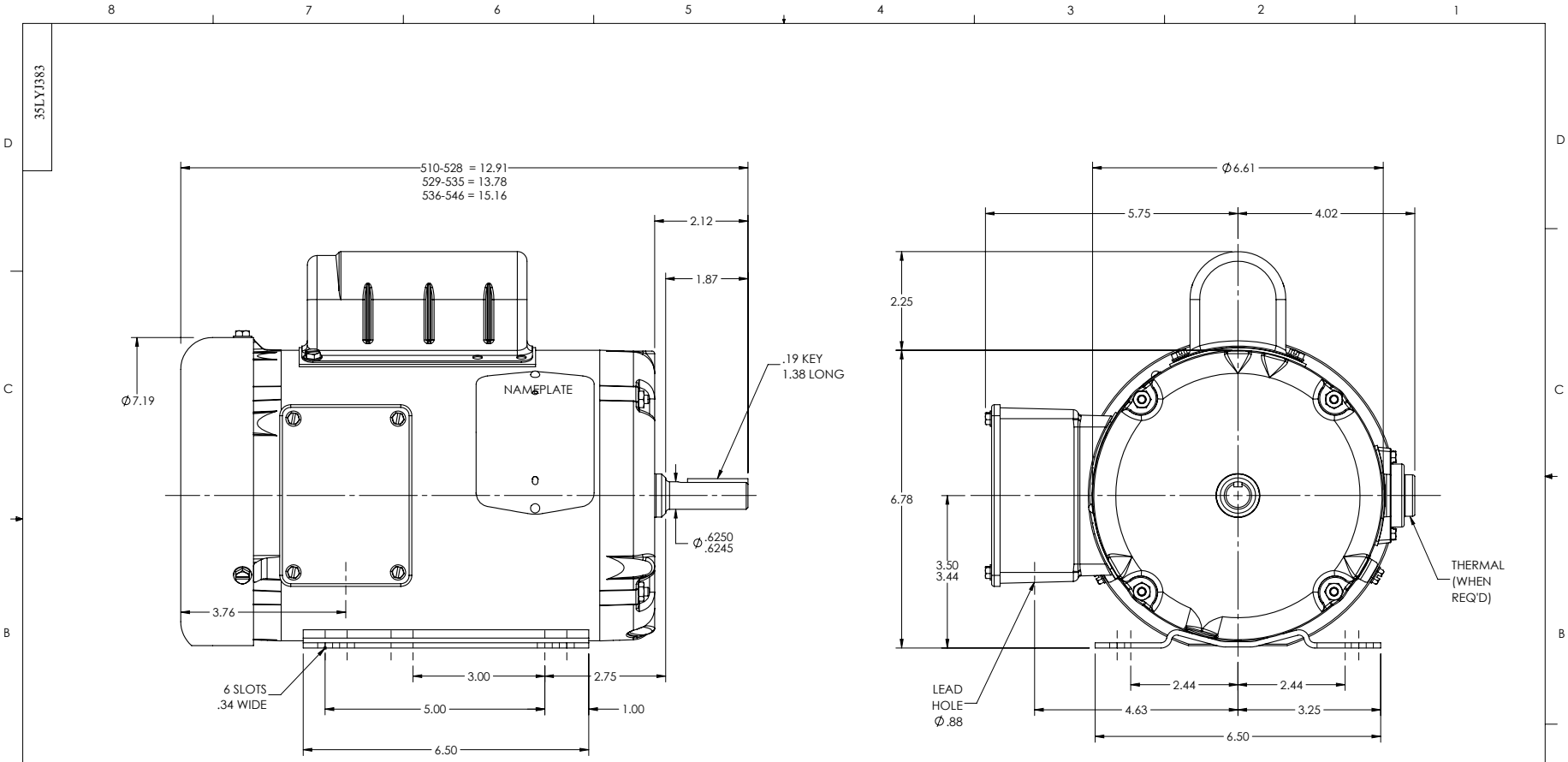

CUSTOMER IS RESPONSIBLE FOR DETERMINING THAT BALDOR'S PRODUCT WILL PERFORM SUITABLY IN THE INTENDED APPLICATION.

REV. DESC: UPDATE 3D MODEL BOM PER REV Z, NO CHG TO 2D PRINT				BALDOR - RELIANCE®
REV: J	VERSION: 04	REVISED: 10:16:43 04/06/2022	TDR: 000001188385	
MODEL NO: 35LYJ383			REF: -	STD HORZ 35L NEMA 56/56H TEFC SH 1 of 1
BY: USBUFRA	Material: -		B	

35LYJ383

CD0001

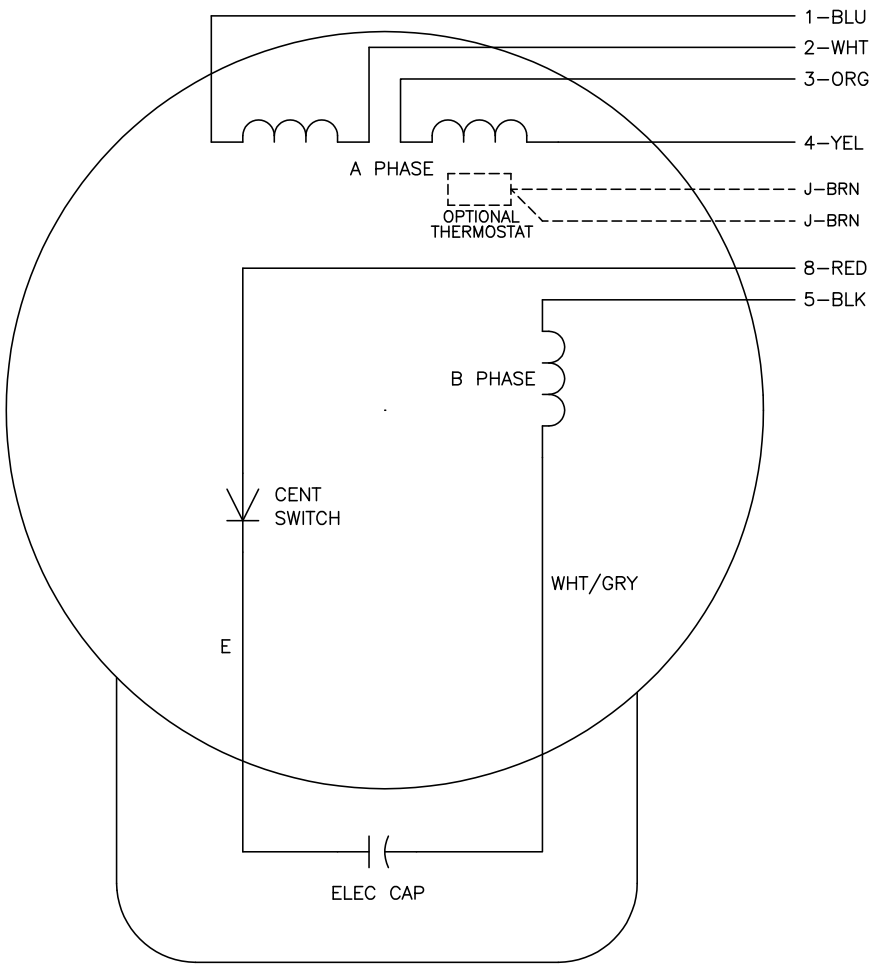

	LINE A	LINE B	JOIN
HIGH STD	1	4,5	2,3,8
HIGH OPP	1	4,8	2,3,5
LOW STD	1,3,8	2,4,5	–
LOW OPP	1,3,5	2,4,8	–

NOTES:

1. STANDARD ROTATION IS CCW FACING END OPPOSITE SHAFT EXTENSION.
2. OPTIONAL THERMOSTAT IS PROVIDED WHEN SPECIFIED.
3. MULTIPLE CAPACITORS ARE CONNECTED IN PARALLEL UNLESS OTHERWISE SPECIFIED.
4. LEAD COLORS ARE OPTIONAL. LEADS MUST ALWAYS BE NUMBERED AS SHOWN.

REV. DESC: REVISE TO SHOW OPTIONAL COLORS			
REV. LTR: D	BY: JLP	REVISED: 04/08/99 1:16	TDR: 0178636
CD0001		FILE: AAA00007405	MDL: –
		MTL: –	

BALDOR ELECTRIC Co.

TYPE L, DV, REV, 6 LEADS

CD0001