Customer information packet

KENM3534

.33HP, 1780RPM, 3PH, 60HZ, 56C, 3512M, TENV, F1
Class - None
Division - Not Applicable

Copyright © All product information within this document is subject to ABB Motors and Mechanical Inc. copyright © protection, unless otherwise noted.
6/9/2025 4:12:49 AM

Specifications

Enclosure	TENV
Frame	56C
Frame Material	Steel
Frequency	60.00 Hz
Haz Area Class and Group	None
Haz Area Division	Not Applicable
Motor Letter Type	Three Phase
Output @ Frequency	.330 HP @ 60 HZ
Phase	3
Synchronous Speed @ Frequency	1800 RPM @ 60 HZ
Voltage @ Frequency	230.0 V @ 60 HZ
	460.0 V @ 60 HZ
Agency Approvals	CSA
	UR
Ambient Temperature	40 °C
Auxillary Box	No Auxillary Box
Auxillary Box Lead Termination	None
Base Indicator	No Mounting
Bearing Grease Type	Polyrex EM (-20F +300F)
Blower	None
Current @ Voltage	.850 A @ 460.0 V
	1.500 A @ 208.0 V
	1.700 A @ 230.0 V
Design Code	B
Drip Cover	No Drip Cover
Duty Rating	CONT
Efficiency @ 100% Load	75.5 %
Electrically Isolated Bearing	Not Electrically Isolated
Feedback Device	NO FEEDBACK
Front Shaft Indicator	None
Heater Indicator	No Heater
High Voltage Full Load Amps	0.9 a

Part detail

Revision	D
Type	AC
Mech. spec.	35E010
Base	
Status	PRD/A
Elec. spec.	35WGG155
Layout	35LYE010
Eff. date	03-04-2025
CD Diagram	CD0005
Poles	04
Leads	9#18
Proprietary	False
Created date	01-10-2022

Insulation Class	F
Inverter Code	Inverter Ready
KVA Code	S
Lifting Lugs	No Lifting Lugs
Locked Bearing Indicator	Locked Bearing
Motor Lead Quantity/Wire Size	9 @ 18 AWG
Motor Lead Termination	Flying Leads
Motor Standards	NEMA
Motor Type	3512M
Mounting Arrangement	F1
Number of Poles	4
Overall Length	11.06 IN
Power Factor	49
Product Family	General Purpose
Pulley End Bearing Type	Ball
Pulley Face Code	C-Face
Pulley Shaft Indicator	Standard
Rodent Screen	None
Service Factor	1.15
Shaft Diameter	0.625 IN
Shaft Ground Indicator	No Shaft Grounding
Shaft Rotation	Reversible
Shaft Slinger Indicator	No Slinger
Speed	1780 rpm
Speed Code	Single Speed
Starting Method	Direct on line
Thermal Device - Bearing	None
Thermal Device - Winding	None
Vibration Sensor Indicator	No Vibration Sensor
Winding Thermal 1	None
Winding Thermal 2	None

Nameplate

NP2116L									
CAT.NO.	KENM3534								
SPEC.	35E010G155G2								
HP	.33								
VOLTS	230/460								
AMP	1.7/.85								
RPM	1780								
FRAME	56C			**HZ**	60		**PH**	3	
SER.F.	1.15	**CODE**	S	**DES**	B	**CL**	F		
NEMA-NOM-EFF	75.5	**PF**	49						
RATING	40C AMB-CONT								
CC									
DE	6205	**ODE**	6203						
ENCL	TENV	**SN**							
	SFA 1.8/.9								

AC Induction Motor Performance Data
Record # 82225
Typical performance - not guaranteed values

Winding: 35WGG155-R016	**Type:** 3512M	**Enclosure:** TENV

Nameplate Data				**460 V, 60 Hz: High Voltage Connection**	
Rated Output (HP)			.33	**Full Load Torque**	0.977 LB-FT
Volts			230/460	**Start Configuration**	direct on line
Full Load Amps			1.7/.85	**Breakdown Torque**	6.28 LB-FT
R.P.M.			1780	**Pull-up Torque**	3.26 LB-FT
Hz	60	**Phase**	3	**Locked-rotor Torque**	4.04 LB-FT
NEMA Design Code	B	**KVA Code**	S	**Starting Current**	6.71 A
Service Factor (S.F.)			1.15	**No-load Current**	0.792 A
NEMA Nom. Eff.	75.5	**Power Factor**	49	**Line-line Res. @ 25ºC**	43.2 Ω
Rating - Duty			40C AMB-CONT	**Temp. Rise @ Rated Load**	49°C
S.F. Amps			1.8/.9	**Temp. Rise @ S.F. Load**	52°C
				Locked-rotor Power Factor	70.8
				Rotor inertia	0.0866 lb-ft²

Load Characteristics 460 V, 60 Hz, 0.33 HP

% of Rated Load	**25**	**50**	**75**	**100**	**125**	**150**	**S.F.**
Power Factor	22	31	41	49	57	63	54
Efficiency	47.4	63.1	70.8	75.1	77.6	79.1	76.6
Speed	1794	1789	1785	1780	1774	1769	1776
Line amperes	0.786	0.791	0.814	0.839	0.878	0.933	0.862

ABB Motors and Mechanical Inc.

WINDING # 35WGG155

Typical performance - not guaranteed values.

0.33 HP 3 PH 60 HZ 1780 RPM 460 V 3512M

TORQUES(LB-FT): PO=6.28 PU=3.26 LR=4.04 LRA=6.71

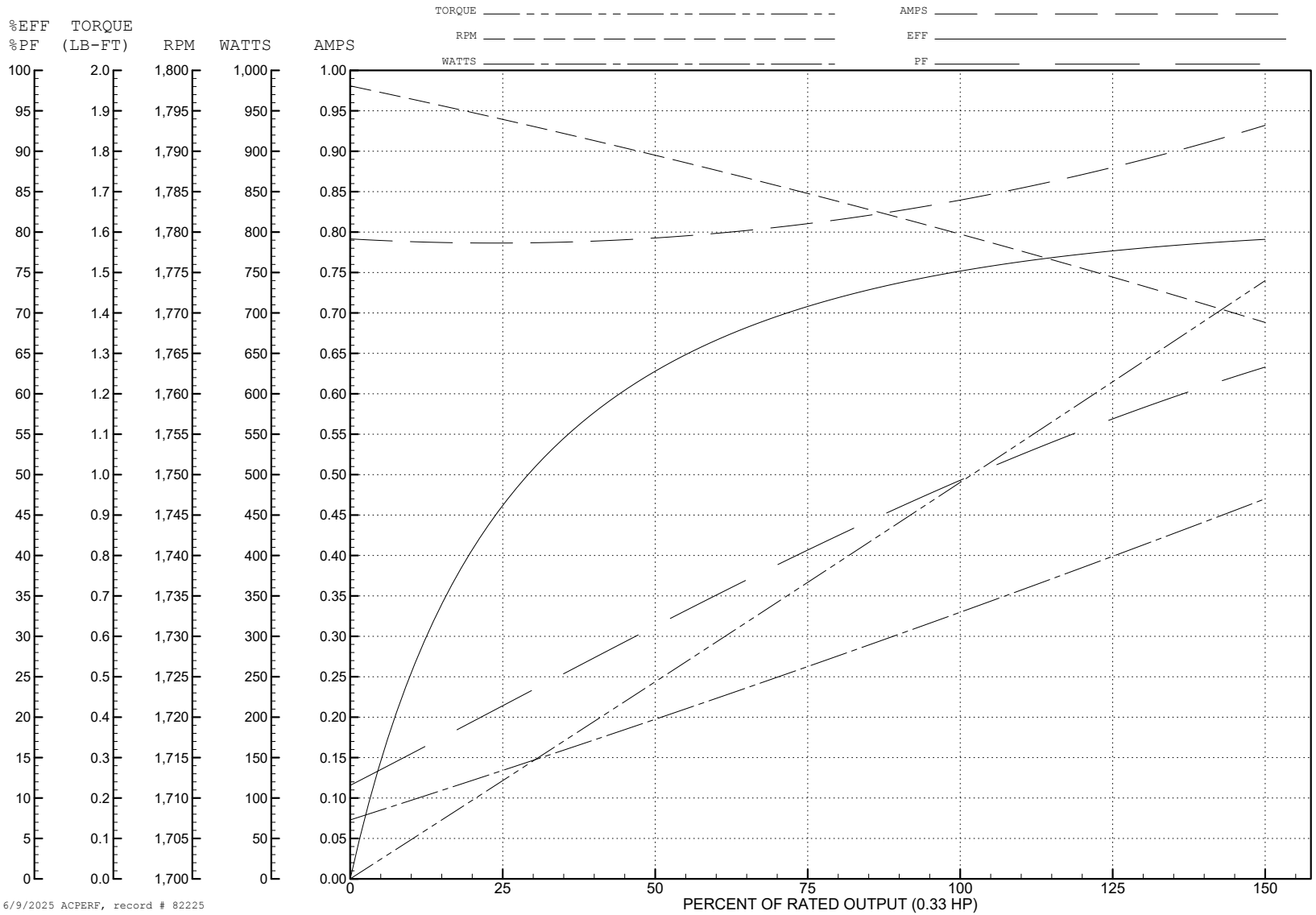

6/9/2025 ACPERF, record # 82225

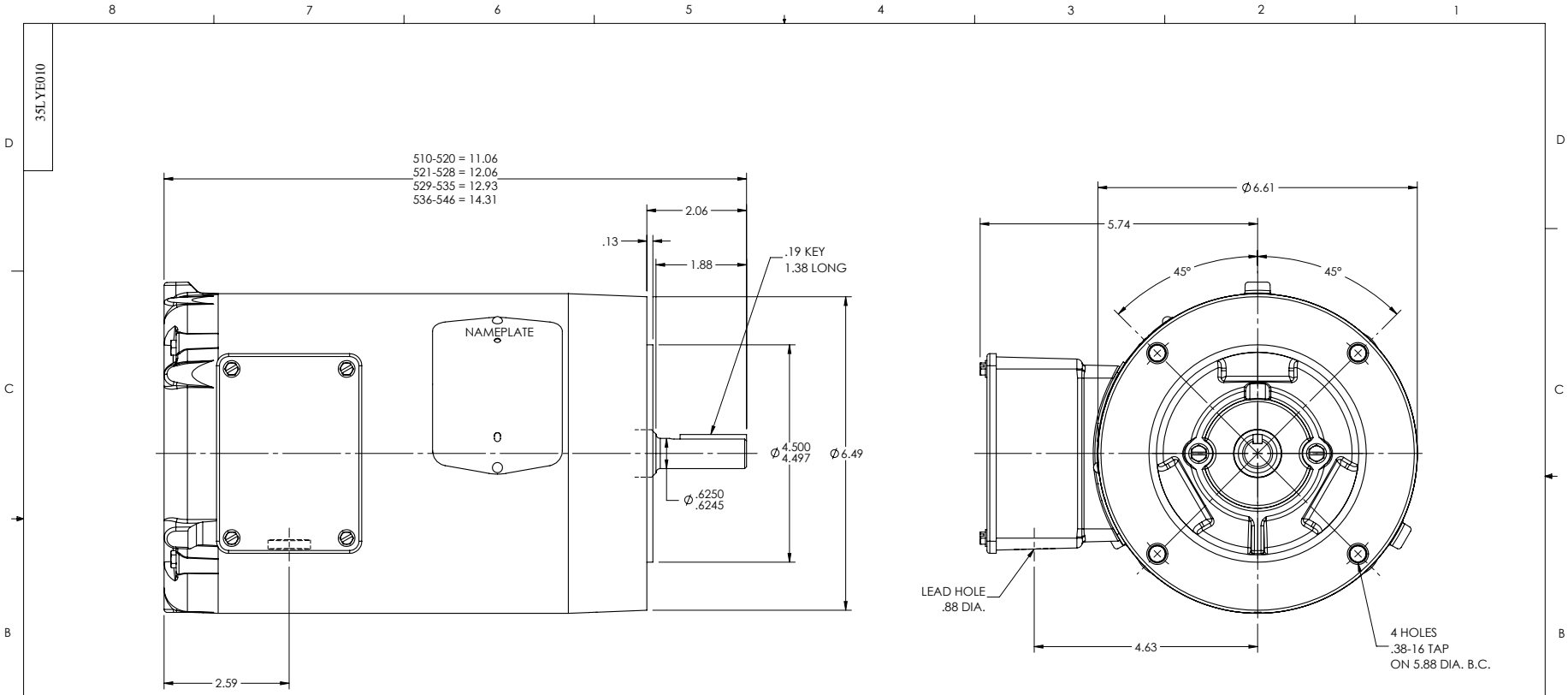

CUSTOMER IS RESPONSIBLE FOR DETERMINING THAT THE PRODUCT WILL PERFORM SUITABLY IN THE INTENDED APPLICATION

REV. DESC: UPDATE 3D MODEL BOM PER REV Y, NO CHG TO 2D PRINT				BALDOR - RELIANCE®
REV: L	VERSION: 07	REVISED: 01:59:38 03/09/2022	TDR: 000001187335	
MODEL NO. 35LYE010			REF: -	STD VERT 56C TENV 35M SH 1 of 1
BY: USBUFRA			B	

35LYE010

CD0005

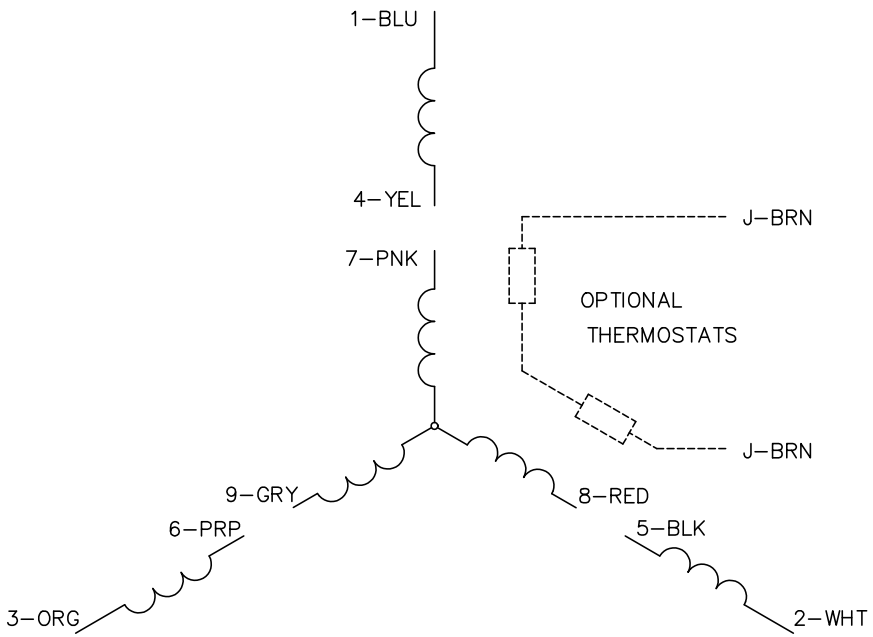

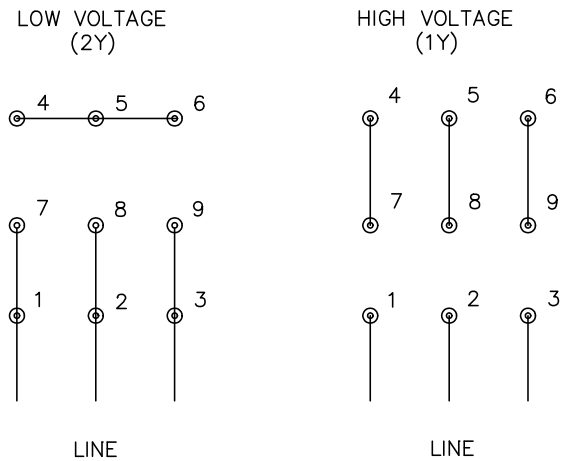

NOTES:

1. INTERCHANGE ANY TWO LINE LEADS TO REVERSE ROTATION.
2. OPTIONAL THERMOSTATS ARE PROVIDED WHEN SPECIFIED.
3. ACTUAL NUMBER OF INTERNAL PARALLEL CIRCUITS MAY BE A MULTIPLE OF THOSE SHOWN ABOVE.
4. LEAD COLORS ARE OPTIONAL. LEADS MUST ALWAYS BE NUMBERED AS SHOWN.

CD0005

REV. DESC: REVISE TO SHOW OPTIONAL COLORS			
REV. LTR: E	BY: JLP	REVISED: 01/19/99 10:15	TDR: 0171435
CD0005		FILE: AAA00005140	MDL: –
		MTL: –	

BALDOR ELECTRIC Co.

3PH, DV, 9 LEADS