Customer information packet

EMM13036-PP

M3BP 132SMD 6P B3 3KW

Copyright © All product information within this document is subject to ABB Motors and Mechanical Inc. copyright © protection, unless otherwise noted.
6/9/2025 4:38:57 AM

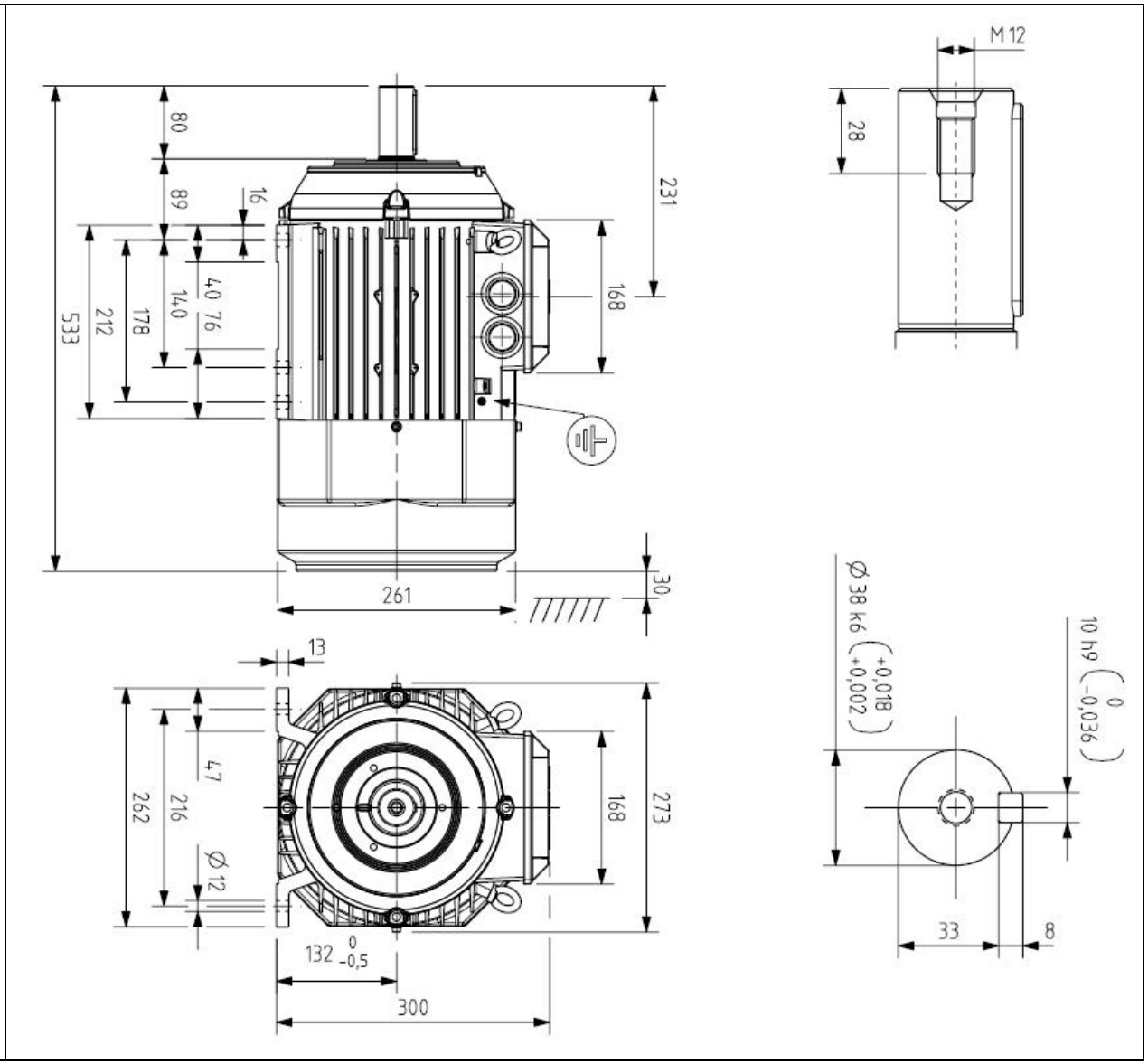

Additional information:

Dimension Print	Motor Type: M3BP 132SM 2-8 B3, B6, B7, B8, V5, V6 M3GP 132SM 2-8 B3, B6, B7, B8, V6		Document No: 3GZF500013-38 J 13 BP 132 J
Description: STANDARD IE3 SQUIRREL CAGE MOTOR			
Unit: Motors and Generators	Issued by: E. Kuntola	Replaces:	
Date: 26.10.2017	Approved by: J-P. Alanen	Replaced by:	
ABB Oy	Customer Reference:		ABB