Customer information packet

EM4406T-5

150HP, 1785RPM, 3PH, 60HZ, 445T, A4488M, TEFC
Class - None
Division - Not Applicable

Copyright © All product information within this document is subject to ABB Motors and Mechanical Inc. copyright © protection, unless otherwise noted.
6/9/2025 4:11:53 AM

Specifications

Enclosure	TEFC
Frame	445T
Frame Material	Iron
Frequency	60.00 Hz
Haz Area Class and Group	None
Haz Area Division	Not Applicable
Motor Letter Type	Three Phase
Output @ Frequency	150.000 HP @ 60 HZ
Phase	3
Synchronous Speed @ Frequency	1800 RPM @ 60 HZ
Voltage @ Frequency	575.0 V @ 60 HZ
Agency Approvals	CCSAUSEEV
Ambient Temperature	40 °C
Auxillary Box	No Auxillary Box
Base Indicator	Rigid
Bearing Grease Type	Polyrex EM (-20F +300F)
Current @ Voltage	135.000 A @ 575.0 V
Design Code	B
Drip Cover	No Drip Cover
Duty Rating	CONT
Efficiency @ 100% Load	95.8 %
Enclosure Modification	841
Feedback Device	NO FEEDBACK
Heater Indicator	No Heater
High Voltage Full Load Amps	135.0 a
Insulation Class	F
Inverter Code	Inverter Ready
KVA Code	F
Lifting Lugs	Standard Lifting Lugs
Motor Lead Quantity/Wire Size	3 @ 1 AWG
Motor Standards	NEMA
Motor Type	A4488M

Part detail

Revision	K
Type	AC
Mech. spec.	
Base	
Status	PRD/A
Elec. spec.	A44WG3784
Layout	617427-001
Eff. date	09-04-2024
CD Diagram	416820-036
Poles	04
Leads	3#1
Proprietary	False
Created date	08-13-2012

Mounting Arrangement	F1
Number of Poles	4
Overall Length	44.75 IN
Power Factor	86
Product Family	Other
Pulley End Bearing Type	Ball
Pulley Face Code	Standard
Service Factor	1.15
Shaft Diameter	3.375 IN
Shaft Ground Indicator	No Shaft Grounding
Shaft Rotation	Reversible
Shaft Slinger Indicator	No Slinger
Speed	1785 rpm
Speed Code	Single Speed
Starting Method	Direct on line
Thermal Device - Bearing	None
Thermal Device - Winding	None

Nameplate

NP2349L																
SPEC NO.	P44G3908			**CAT.NO.**	EM4406T-5								**FRAME**	445T		
HP	150	**VOLTS**	575		**PHASE**	3		**DESIGN**	B	**TYPE**	P					
RPM	1785	**AMPS**	135		**HZ**	60	**AMB**	40	**SF**	1.15						
DRIVE END BEARING	90BC03J30X			**DUTY**	CONT		**INSUL.CLASS**	F								
OPP D.E. BEARING	90BC03J30X			**ENCL**	TEFC	**CODE**	F									
SER.NO.				**POWER FACTOR**	86							**NEMA-NOM-EFFICIENCY**	95.8			
								MAX CORR KVAR	30.0			**GUARANTEED EFFICIENCY**			95.0	
								NEMA NOM/CSA QUOTED EFF								
													MOTOR WEIGHT			

617427-001

DUTY MASTER ALTERNATING CURRENT MOTORS

SQUIRREL-CAGE INDUCTION

ENCLOSURE: TOTALLY ENCLOSED

FRAME G445T ABOVE NEMA RATINGS

COOLING: FAN COOLED

MOUNTING: FOOT

INCLUDES 444T FRAME MOUNTING HOLES

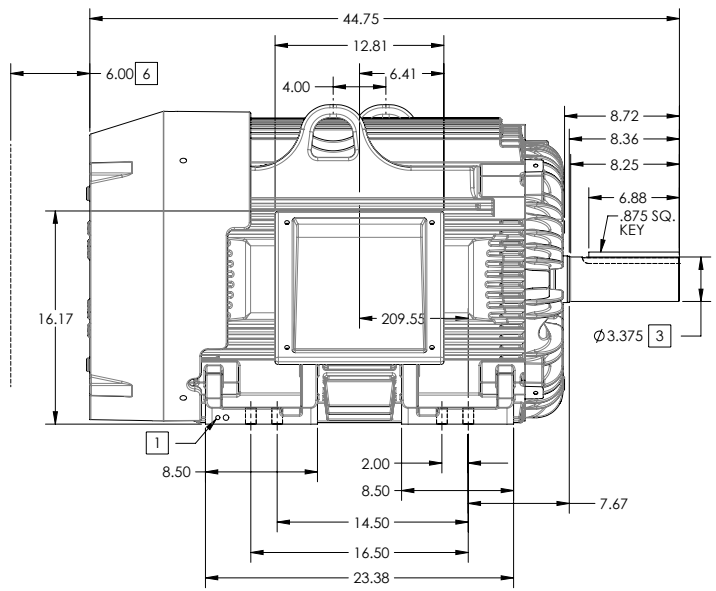

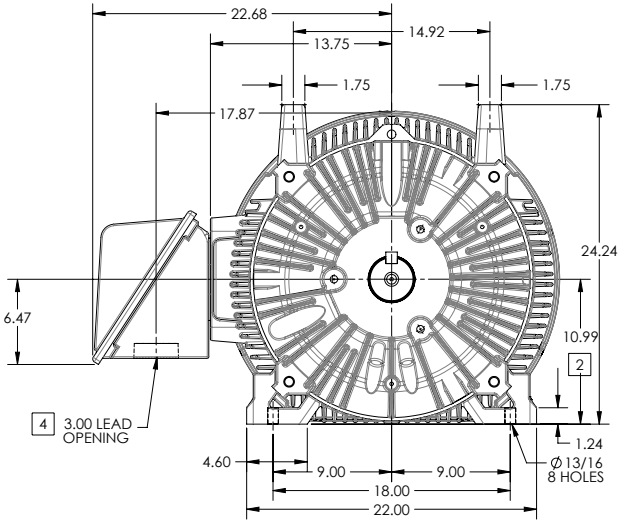

1. GROUND HOLES QTY 1 1/2-13 TAP; QTY 1 3/8-16 TAP
2. VARIES +.00,-.06
3. VARIES +.000,-.001
4. ON STANDARD MOTORS THIS IS CONDUIT SIZE. ON XT AND CORROSION PROOF MOTOR THIS IS PIPE TAP.
5. MOTOR WEIGHTS MAY VARY BY 15% DEPENDING ON RATING.
6. OBSTRUCTION MUST NOT ENCROACH ON AIR INLET

CONDUIT BOX LOCATED ON OPPOSITE SIDE WHEN F-2.
IF MOUNTING CLEARANCE DETAILS ARE REQUIRED, CONSULT FACTORY.
MAXIMUM PERMISSIBLE SHAFT RUNOUT WHEN MEASURED AT END OF STANDARD SHAFT EXTENSION IS .003" T.I.R. TO 5 INCH DIA.

5 WEIGHT (LBS): 2130

DRIVE END AIR DEFLECTOR IS ONLY INCLUDED WHEN NECESSARY.

DIMENSIONS ARE IN INCHES; SEE SHEET 2 FOR DIMENSIONS IN MILLIMETERS

CUSTOMER IS RESPONSIBLE FOR DETERMINING THAT MOTOR PERFORMANCE IS SUITABLE IN THE APPLICATION.

SHEET NUMBER
1 OF 2

617427-001

REV. DESC: SHEET 2 NEEDS METRIC FOOT HOLE DIMENSION			
REV: E	VERSION: 05	REVISED: 09:22:56 06/12/2014	TDR: 000000857938
MODEL NO. 617427-001			REF:
BY: RAGRA	Material:		C

BALDOR

G445T/444T STD – FOOTED – SIDE/CENTER C/B

617427-001

617427-001

DUTY MASTER ALTERNATING CURRENT MOTORS

SQUIRREL-CAGE INDUCTION

ENCLOSURE: TOTALLY ENCLOSED

FRAME G445T ABOVE NEMA RATINGS

COOLING: FAN COOLED

MOUNTING: FOOT

INCLUDES 444T FRAME MOUNTING HOLES

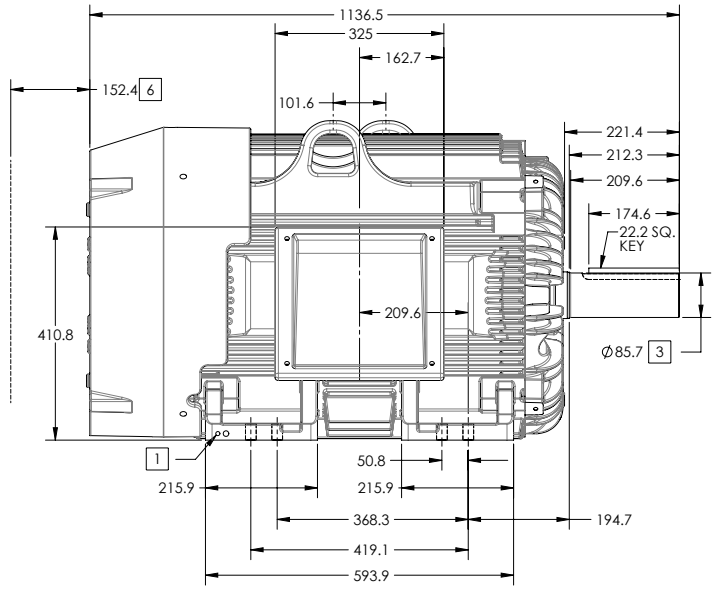

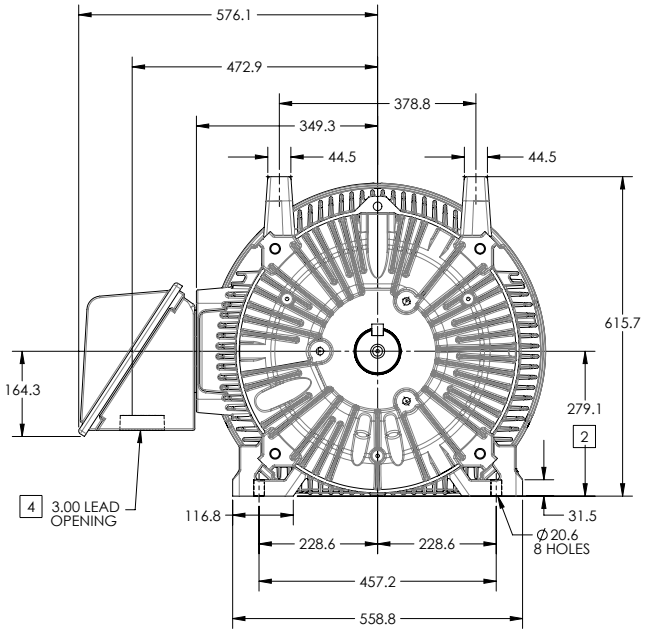

1. GROUND HOLES QTY 1 1/2-13 TAP; QTY 1 3/8-16 TAP
2. VARIES +.0,-1.5
3. VARIES +.00,-.03
4. ON STANDARD MOTORS THIS IS CONDUIT SIZE. ON XT AND CORROSION PROOF MOTOR THIS IS PIPE TAP.
5. MOTOR WEIGHTS MAY VARY BY 15% DEPENDING ON RATING.
6. OBSTRUCTION MUST NOT ENCROACH ON AIR INLET

CONDUIT BOX LOCATED ON OPPOSITE SIDE WHEN F-2.
IF MOUNTING CLEARANCE DETAILS ARE REQUIRED, CONSULT FACTORY.
MAXIMUM PERMISSIBLE SHAFT RUNOUT WHEN MEASURED AT END OF STANDARD SHAFT EXTENSION IS .08 MM T.I.R. TO 127 MM DIA.

5 WEIGHT (KGS): 970

DRIVE END AIR DEFLECTOR IS ONLY INCLUDED WHEN NECESSARY.

DIMENSIONS ARE IN MILLIMETERS; SEE SHEET 1 FOR DIMENSIONS IN INCHES

CUSTOMER IS RESPONSIBLE FOR DETERMINING THAT MOTOR PERFORMANCE IS SUITABLE IN THE APPLICATION.

SHEET NUMBER
2 OF 2

617427-001

REV. DESC: SHEET 2 NEEDS METRIC FOOT HOLE DIMENSION			
REV: E	VERSION: 05	REVISED: 09:22:56 06/12/2014	TDR: 000000857938
MODEL NO. 617427-001			REF:
BY: RAGRA	Material:		C

BALDOR

G445T/444T STD – FOOTED – SIDE/CENTER C/B

617427-001

416820–036

A–C MOTOR
CONNECTION DIAGRAM
STANDARD 3 LEAD CONNECTED

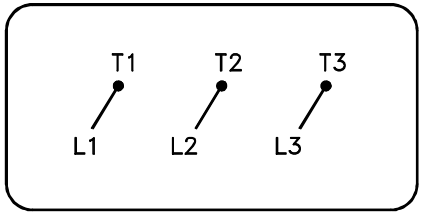

(N.P. 1575–BA)

416820–036

REV. DESC: LOADED TO BUS, C/R 335225			BALDOR
REV. LTR: –	VERSION: 00	TDR: 000000538207	
FILE: \MGA\00000\682		REVISED: 11:54:06 04/30/2010	CONN DIAG – STANDARD 3 LEAD
MTL: –		BY: RAGRA	SH 1 of 1