Customer information packet

EM3157TA

2HP, 1770RPM, 3PH, 60HZ, 56HZ, 3526M, OPSB, F1
Class - None
Division - Not Applicable

Copyright © All product information within this document is subject to ABB Motors and Mechanical Inc. copyright © protection, unless otherwise noted.
6/9/2025 4:29:32 AM

Specifications

Enclosure	OPSB
Frame	56HZ
Frame Material	Steel
Frequency	60.00 Hz
Haz Area Class and Group	None
Haz Area Division	Not Applicable
Motor Letter Type	Three Phase
Output @ Frequency	2.000 HP @ 60 HZ
Phase	3
Synchronous Speed @ Frequency	1800 RPM @ 60 HZ
Voltage @ Frequency	230.0 V @ 60 HZ 460.0 V @ 60 HZ
Agency Approvals	CURUSEEV NEMA PREMIUM
Ambient Temperature	40 °C
Auxillary Box	No Auxillary Box
Auxillary Box Lead Termination	None
Base Indicator	Rigid
Bearing Grease Type	Polyrex EM (-20F +300F)
Blower	None
Current @ Voltage	2.900 A @ 460.0 V 5.800 A @ 208.0 V 5.800 A @ 230.0 V
Design Code	B
Drip Cover	No Drip Cover
Duty Rating	CONT
Efficiency @ 100% Load	86.5 %
Electrically Isolated Bearing	Not Electrically Isolated
Feedback Device	NO FEEDBACK
Front Shaft Indicator	None
Heater Indicator	No Heater
High Voltage Full Load Amps	2.9 a

Part detail

Revision	-
Type	AC
Mech. spec.	35Q805
Base	
Status	PRD/A
Elec. spec.	35WGG312
Layout	35LYQ805
Eff. date	12-02-2024
CD Diagram	CD0007
Poles	04
Leads	12#18
Proprietary	False
Created date	11-14-2024

Insulation Class	F
Inverter Code	Inverter Ready
KVA Code	L
Lifting Lugs	No Lifting Lugs
Locked Bearing Indicator	No Locked Bearing
Motor Lead Quantity/Wire Size	12 @ 18 AWG
Motor Lead Termination	Flying Leads
Motor Standards	NEMA
Motor Type	3526M
Mounting Arrangement	F1
Number of Poles	4
Overall Length	12.13 IN
Power Factor	74
Product Family	General Purpose
Pulley End Bearing Type	Ball
Pulley Face Code	Standard
Pulley Shaft Indicator	Standard
Rodent Screen	None
Service Factor	1.15
Shaft Diameter	0.875 IN
Shaft Ground Indicator	No Shaft Grounding
Shaft Rotation	Reversible
Shaft Slinger Indicator	No Slinger
Speed	1770 rpm
Speed Code	Single Speed
Starting Method	Direct on line
Thermal Device - Bearing	None
Thermal Device - Winding	None
Vibration Sensor Indicator	No Vibration Sensor
Winding Thermal 1	Automatic Thermal Overload
Winding Thermal 1 Location	SB
Winding Thermal 2	None

Nameplate

NP2601L									
CAT.NO.	EM3157TA								
SPEC.	35Q805G312G1								
HP	2								
VOLTS	230/460								
AMP	5.8/2.9								
RPM	1770								
FRAME	56HZ		**HZ**	60			**PH**	3	
SER.F.	1.15	**CODE**	L	**DES**	B	**CL**	F		
NEMA-NOM-EFF	86.5	**PF**	74						
RATING	40C AMB-CONT								
CC									
DE	6205		**ODE**	6203					
ENCL	OPSB	**SN**							
	SFA 6.6/3.3								

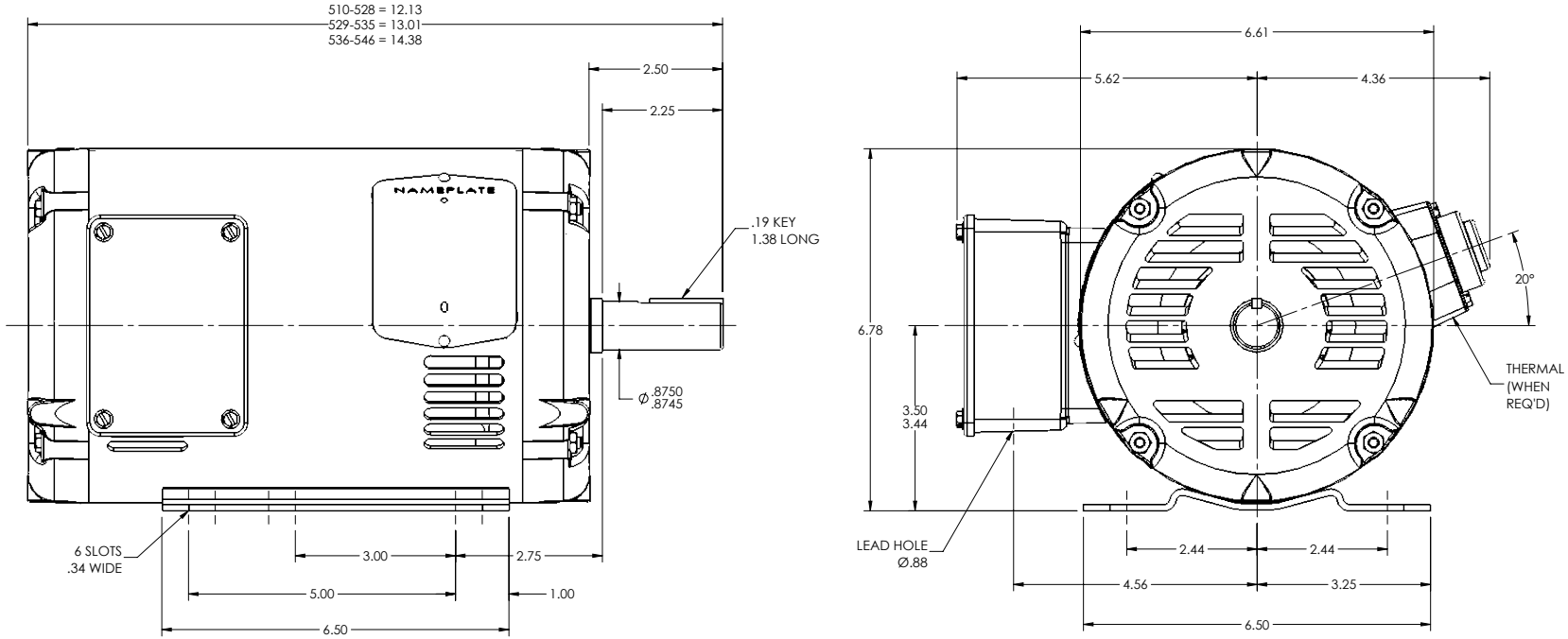

CUSTOMER IS RESPONSIBLE FOR DETERMINING THAT THE PRODUCT WILL PERFORM SUITABLY IN THE INTENDED APPLICATION

REV. DESC: ADD THERMAL DIMS AND THERMAL WHEN REQUIRED NOTE			
REV: E	VERSION: 05	REVISED: 08:20:11 04/11/2023	TDR: 000001205626
MODEL NO. 35LYQ805			REF: -
BY: USBUFRA			B

BALDOR - RELIANCE®

HORZ 35M OPSB 56Z/56HZ, 143-5T, V=2.25, U=.875
SH 1 OF 1

35LYQ805

CD0007

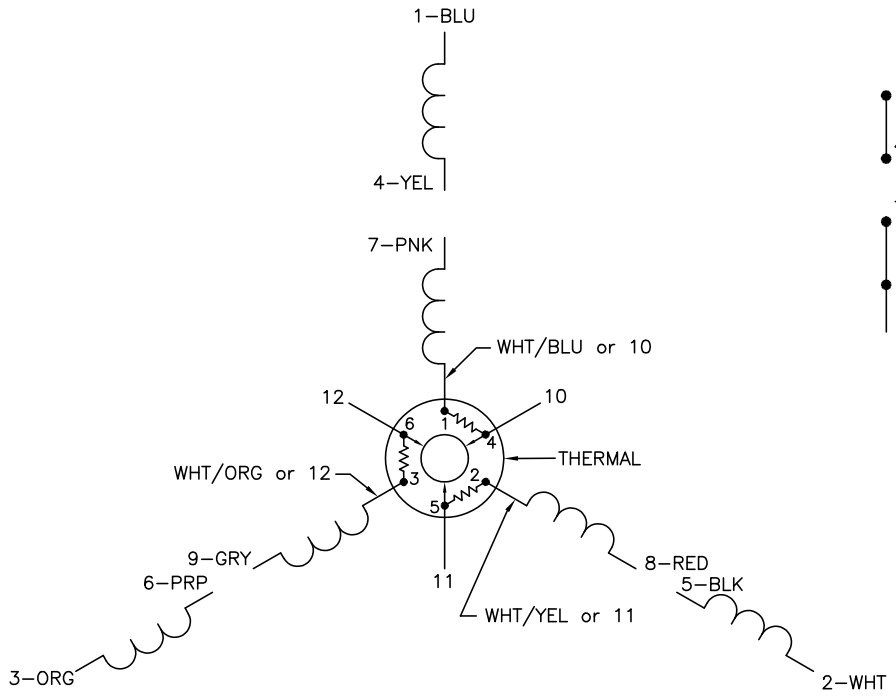

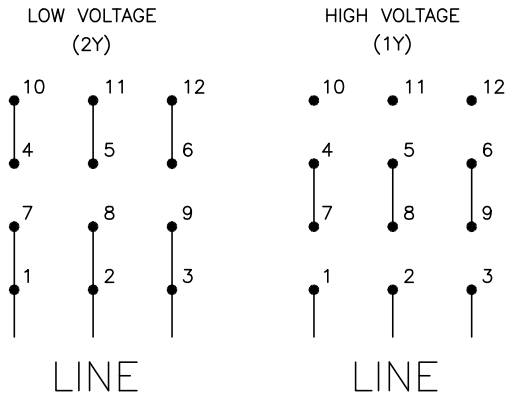

NOTES:

1. INTERCHANGE ANY TWO LINE LEADS TO REVERSE ROTATION.
2. ACTUAL NUMBER OF INTERNAL PARALLEL CIRCUITS MAY VARY.
3. LEAD COLORS ARE OPTIONAL. LEADS MUST ALWAYS BE NUMBERED AS SHOWN.

REV. DESC: ADDED "CK" PLANT CODE			
REV. LTR: E	BY: EAH	REVISED: 05/06/99 17:1	TDR: 0181040
CD0007		FILE: AAA00008370	MDL: –
		MTL: –	

BALDOR ELECTRIC Co.

3PH, DV, THERMAL, 12 LEADS

CD0007