86B-400 SERIES

STAINLESS STEEL 3-PIECE FULL PORT
CLASS 600 SCH. 10 BUTT WELD BALL VALVE

5 YEAR WARRANTY MADE IN USA

STANDARD COMPLIANCE

- Valve Design: ASME B16.34, Class 600, NACE MR0175 (2000) & MR0103 (2012), API 608
- End Connections: Butt-Weld per ASME B16.25
- Valve Marking: ASME B16.34
- Production Testing: ASME B16.34

FEATURES

- 3-piece construction w/ enclosed fasteners
- Full port
- Stainless steel trim & hardware
- Swing-out center section
- Pressure balanced solid ball
- Compression controlled spiral wound gaskets
- Anti-blowout one piece bottom entry stem
- Statically grounded ball, stem, & body
- Two-position locking
- Adjustable multi-piece PTFE "V" style packing
- Fully machined ISO 5211 mounting
- Cast bosses on the center-section and end caps for bleed & drain ports
- Fire safe to API 607 (requires -24 suffix)
- Vacuum service to 29 in of Hg.
- CE Marking, 1-1/2" and larger (add "-CE" suffix)
- 250 psig saturated steam
- CGA 3.16-M88 (2014)

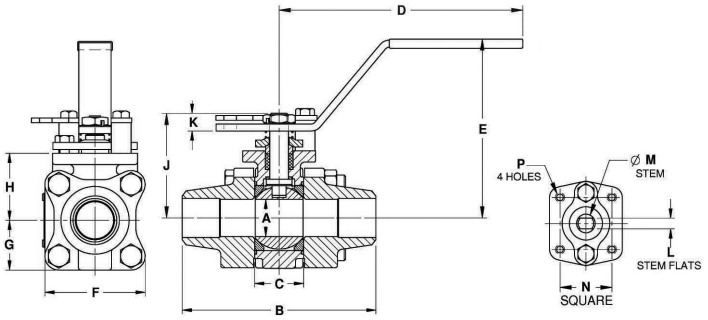

VARIATIONS AVAILABLE

- 86B-300 Schedule 5 Butt-Weld
- 86B-500 Schedule 40 Butt-Weld
- 86B-600 Schedule 80 Butt-Weld

OPTIONS AVAILABLE

(MORE INFORMATION IN SECTION J)

- Minimum quantities apply
- To specify an option, replace the "01" standard suffix with the suffix of the option.
- To specify multiple options, replace the "01" suffix with the desired suffixes in the numerical order shown below. NOTE: Not all suffixes can be combined together.

(SUFFIX)	OPTION	SIZES
-01	Standard Configuration	All
-04-	2-1/4" Stem Extension (Carbon Steel, Zinc Plated)	All
-14-	Vented Ball	All
-15-	Stainless Steel Locking Round Handle	All
-21-	UHMWPE Seats w/ Graphite Seals	All
-24-	Graphite Packing, Spiral Wound Graphite Body Seal, PTFE/PEEK Bearing (Fire Safe API 607, 6th Edition, ISO 10497:2010)	All
-38-	Peek Seats, Graphite Stem Packing & Gaskets	All
-49-	No Lubrication. Assembled Dry	All
-57-	Cleaned for Oxygen Service	All
-62-	Center Section Only	All
-66-	FNPT x Buttweld	All
-69-	Drilled & Tapped Purge & Drains	All
-70-	4" Extended Bonnet	All
-76-	Live Loaded (Lever Operated)	All
-77-	Live Loaded (Actuated)	All
-90-	Double Packed 4" Extended Bonnet	All
-9P-	Double Packed 4" Extended Bonnet w/ Monitoring Port	All
-CE-	CE Marking	1-1/4" to 2"
-EP-	Garlock EVSP Stem Packing w/ Spiral Wound Graphite Gasket (Fire Safe by Design)	All
-EF-	Graphite Packing (API 641 Compliant)	3/4" to 2"
-KF-	PCTFE Stem Bearing	All
-SR-	Spring Return Handle	1/2" to 1"
-UA-	AIS (American Iron & Steel) Compliant	All
-UL-	UL Listed	All
-ZP1-	Fugitive Emissions Packing (Viton)	All
-ZP2-	Fugitive Emissions Packing (Buna-N)	All
-ZP3-	Fugitive Emissions Packing (Kalrez)	All

Pressure/Temperature Ratings - Page M-20, Graph No. 26

STANDARD MATERIAL LIST

	PART	MATERIAL
1	Body	ASTM A351-CF8M
2	End Caps	ASTM A351-CF3M
3	Ball	ASTM A276-316SS
4	Stem	ASTM A276-316SS ASTM A564 17-4PH (2" with -38 suffix)
5	Seat	Multi-Seal
6	Packing	PTFE
7	Stem Bearing	PEEK/PTFE
8	Body Gasket	PTFE Spiral Wound
9	Body Bolts	ASTM A193-Gr.B8M3
10	Body Nuts	ASTM A194-Gr.8
11	Stop Bolts	18-8 Stainless Steel
12	Gland Bolts	ASTM A193-Gr.B8
13	Handle Nut/Screw	300 Series Stainless Steel
14	Packing Gland	ASTM A276-316SS
15	Gland Plate	300 Series Stainless Steel
16	Lever Handle	300 Series Stainless Steel
17	Lock Plate	300 Series Stainless Steel
18	Stops	300 Series Stainless Steel
19	Internal Grounding Spring	300 Series Stainless Steel
20	External Grounding Spring	300 Series Stainless Steel

DIMENSIONS

PART NO.	SIZE	A	B	C	D	E	F	G	H	J	K	L	M	N	P	WT.
86B-403-01	1/2"	0.50	3.80	0.89	5.12	3.02	2.02	1.01	1.39	1.97	0.23	0.245	0.375	1.00	10-24	2.3
86B-404-01	3/4"	0.75	4.66	1.10	5.53	3.40	2.40	1.20	1.65	2.35	0.24	0.312	0.500	1.392	1/4-20	4.0
86B-405-01	1"	1.00	5.19	1.31	6.53	4.80	2.67	1.34	1.80	2.80	0.48	0.287	0.500	1.392	1/4-20	5.7
86B-407-01	1-1/2"	1.50	5.96	1.97	6.65	4.70	3.84	1.92	2.49	3.89	0.72	0.412	0.625	1.949	5/16-18	14.4
86B-408-01	2"	2.00	6.84	2.56	8.40	5.47	4.56	2.46	3.17	4.74	0.80	0.477	0.750	1.949	5/16-18	24.4

REV. 17SEP19