AMETEK

Product Bulletin

LAMB ELECTRIC

AIR WATT™ SERIES

Model: 122039-00

DESCRIPTION

- Dual-Tapered Fan System
- 240 Volts
- 5.7"/ 145 mm diameter
- Dual ball bearings
- Single speed
- Tangential bypass discharge
- Thermoset fan end bracket
- Thermoset Plastic commutator bracket

DESIGN APPLICATION

- Equipment operating in environments requiring separation of working air from motor ventilating air
- Designed to handle clean, dry, filtered air only

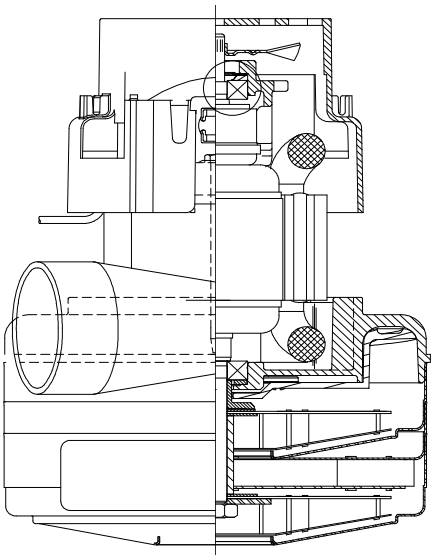

SPECIAL FEATURES

- Suitable for 240 Volts 50/60 Hz
- UL recognized, category PRGY2 (E47185)
- Provision for grounding
- Skeleton frame design
- Dual Tapered fan system

- The Lamb vacuum motor line offers a wide range of performance levels to meet design needs

PEAK AIRWATTS
610
Calculated in accordance with ASTM F2105

TYPICAL MOTOR PERFORMANCE.*

(At 240 Volts , 60Hz, test data is corrected to standard conditions of 29.92 Hg, 68° F.)

ASTM DATA

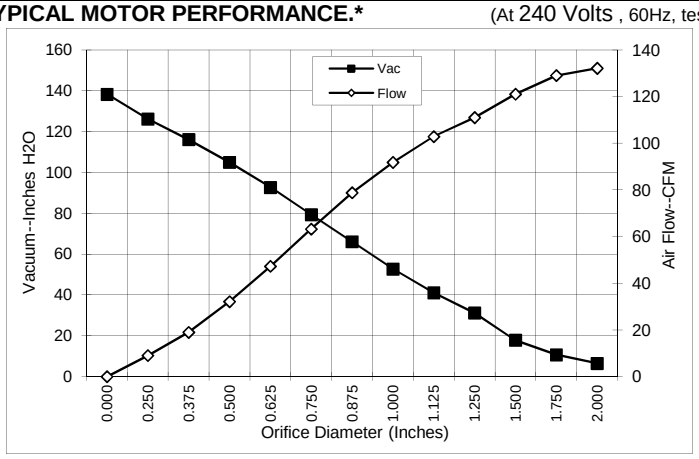

Orifice (Inches)	Amps	Watts (In)	RPM	Vac (In.H2O)	Flow (CFM)	Air Watts
2.000	8.0	1841	24175	6.5	132.1	101
1.750	8.0	1848	24147	10.7	129.0	162
1.500	8.0	1852	24104	17.8	121.0	254
1.250	8.0	1849	24100	31.2	111.0	406
1.125	8.0	1840	24193	41.1	102.9	496
1.000	7.9	1821	24311	52.7	91.8	568
0.875	7.7	1788	24549	66.1	78.8	611
0.750	7.4	1714	25071	79.3	63.2	589
0.625	6.9	1611	25852	92.7	47.3	514
0.500	6.4	1486	26913	104.9	32.1	396
0.375	5.7	1345	28301	116.1	19.0	258
0.250	5.2	1214	29801	126.1	9.1	134
0.000	4.8	1132	31090	138.3	0.0	0

METRIC DATA

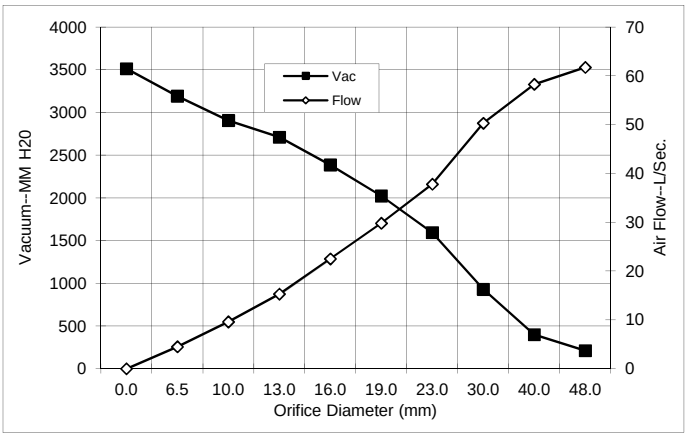

Orifice (mm)	Amps	Watts (In)	RPM	Vac (mm H2O)	Flow (L/Sec)	Air Watts
48.0	8.0	1844	24163	212	61.7	128
40.0	8.0	1851	24117	399	58.3	226
30.0	8.0	1844	24151	930	50.3	455
23.0	7.8	1796	24490	1593	37.8	600
19.0	7.4	1712	25086	2022	29.8	587
16.0	7.0	1615	25820	2385	22.5	517
13.0	6.4	1498	26807	2710	15.3	407
10.0	5.8	1367	28093	2906	9.6	279
6.5	5.2	1220	29726	3191	4.5	140
0.0	4.8	1132	31090	3512	0.0	0

Note: Metric performance data is calculated from the ASTM data above.

* Data represents performance of a typical motor sampled from a large production quantity. Individual motor data may vary to normal manufacturing variations.

Test Specs:	240 volt	**Minimum Sealed Vacuum: 76**	134"	**ORIFICE: 7/8"**	**Minimum Vacuum:**	60"	**Maximum Watts:** 1930

DIMENSIONS

NOTES:

1. POWER LEADS: 18GA STRANDED, LEADS CAN BE ANY COLOR EXCEPT GREEN OR GREEN WITH YELLOW STRIPE.
   GROUND LEAD: 18GA STRANDED, GREEN OR GREEN WITH YELLOW STRIPE.
2. MOTOR IDENTIFICATION: MANUFACTURER'S NAME, MODEL NUMBER, VOLTAGE, FREQUENCY, INSPECTORS CODE WITH "FF" SUFFIX, DATE OF MANUFACTURE, AGENCY RECOGNITION CODE, PLANT LOCATION CODE, PATENT INFORMATION "ONE OR MORE OF THE FOLLOWING PATENTS APPLY TO THIS MOTOR: 5482378; 5736805; 4669952; 4684835; 6561772". AND COUNTRY OF ORIGIN.
3. ALLOW [0.0016 SQ M]/2.5 SQ IN. MIN. FOR COOLING AIR INTAKE.
4. COOLING AIR INTAKE MUST BE SEPARATED FROM COOLING AIR EXHAUST.
5. VACUUM EXHAUST MUST BE SEPARATED FROM COOLING EXHAUST.
6. MOUNTING MUST NOT RESTRICT THIS DIAMETER.

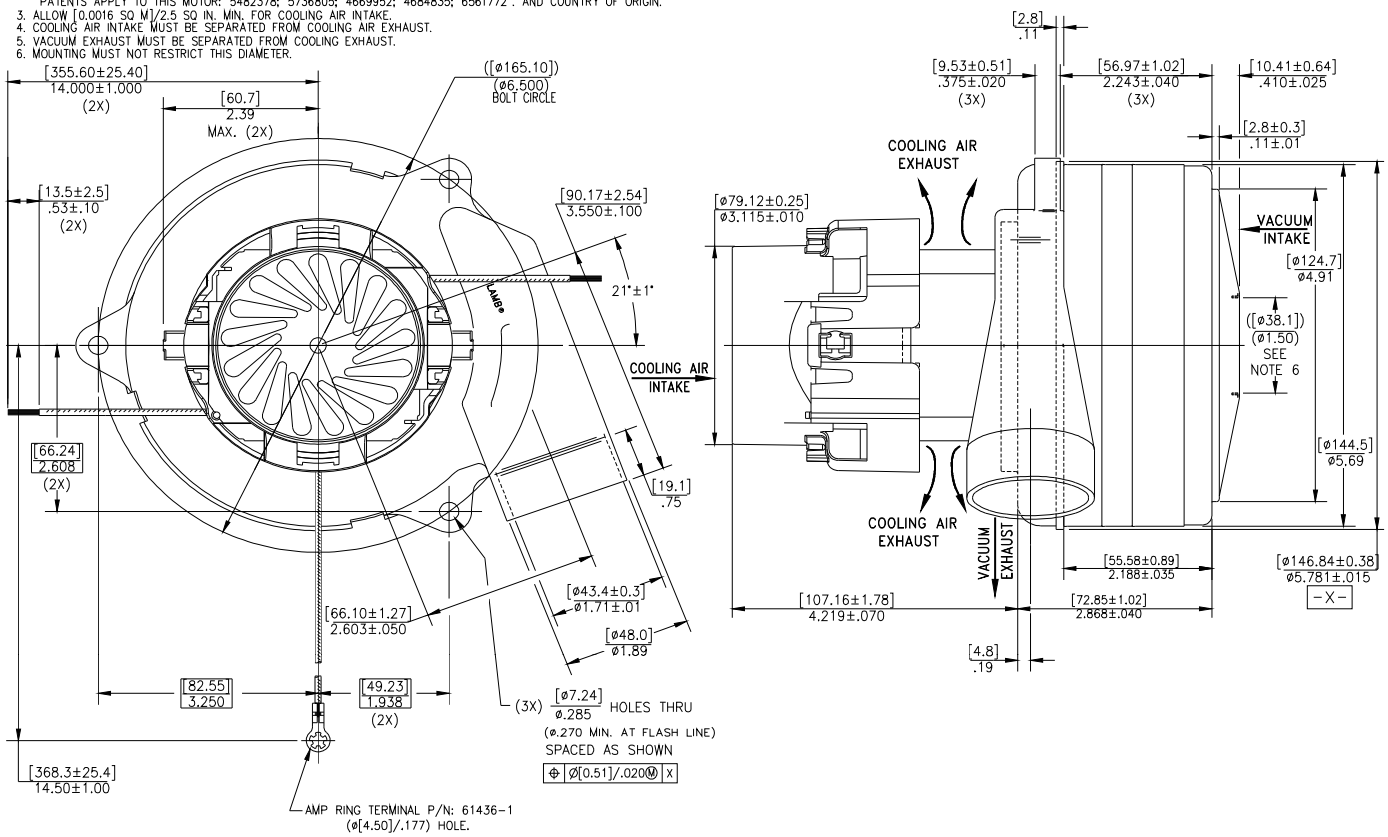

IMPORTANT NOTE: *Pictorial and dimensional data are subject to change without notice. Contact factory for current revision levels.*

WARNING - When using AMETEK/Lamb Electric bypass motors in machines that come in contact with foam, liquid (including water) of other foreign substances, the machine must be designed and constructed to prevent those substances from reaching the fan system, motor housing and electrical components. Lamb vacuum motors other than hazardous duty models should not be applied in machines that come in contact with dry chemicals or other volatile materials. Failure to observe these precautions could cause flashing (depending on volatility) or electrical shock which could result in property damage and severe bodily injury, including death in extreme cases. All applications incorporating Lamb motors should be submitted to appropriate organizations or agencies for testing specifically related to the safety of your equipment.

AMETEK/Floorcare & Specialty Motors
www.ametekfsm.com