AMETEK

LAMB ELECTRIC

Product Bulletin

Model: 116040-13

DESCRIPTION

- Two stage
- 220 volts
- 5.7"/145 mm diameter
- Double ball bearings
- Single speed
- ACUSTEK® low-noise peripheral bypass discharge
- Double insulation
- Thermoset fan bracket
- Thermoset commutator bracket

DESIGN APPLICATION

- Equipment operating in environments requiring separation of working air from motor ventilating air
- Designed to handle clean, dry, filtered air only

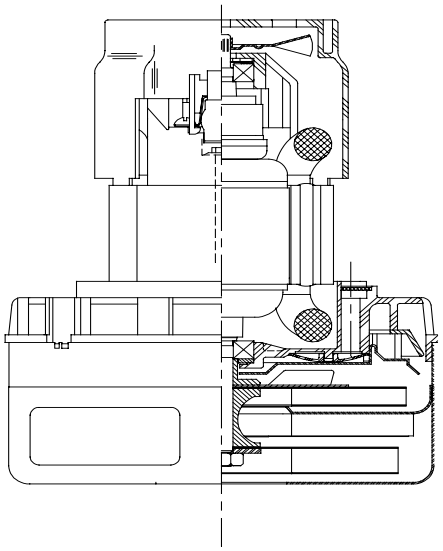

SPECIAL FEATURES

- Suitable for 220 volt AC operation, 50/60 Hz
- UL recognized, category PRGY2 (E47185)
- Skeleton-frame design
- Epoxy painted fan case
- Patented air seal bearing construction, U.S. Patent #4,088,424
- ACUSTEK® low-noise design, U.S. Patent #1,417,200
- The Lamb Electric vacuum motor line offers a wide range of performance levels to meet design needs

TYPICAL MOTOR PERFORMANCE.*

(At 220 volts, 60Hz, test data is corrected to standard conditions of 29.92 Hg, 68° F.)

ASTM DATA

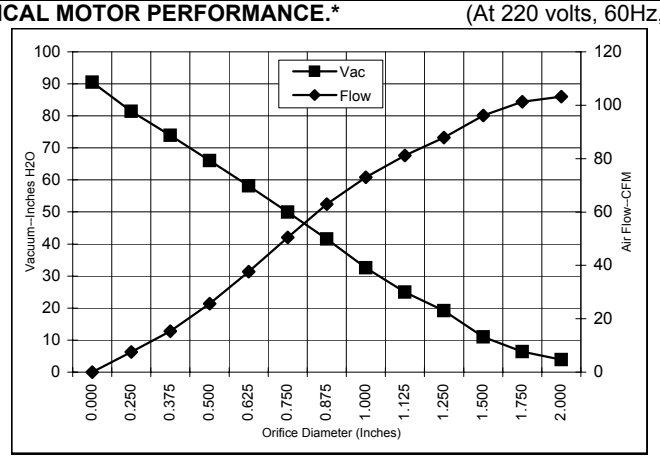

Orifice (Inches)	Amps	Watts (In)	RPM	Vac (In.H2O)	Flow (CFM)	Air Watts
2.000	5.1	1072	18720	3.9	103.2	47
1.750	5.1	1052	18680	6.4	101.3	77
1.500	5.1	1040	18650	11.0	96.1	125
1.250	5.1	1042	18650	19.2	87.9	198
1.125	5.1	1040	18680	25.0	81.2	239
1.000	5.0	1035	18750	32.6	73.0	280
0.875	5.0	1023	18880	41.6	62.9	307
0.750	4.8	990	19240	50.0	50.5	297
0.625	4.6	941	19860	58.1	37.7	257
0.500	4.3	876	20720	66.0	25.6	199
0.375	3.9	806	21760	73.9	15.4	134
0.250	3.6	747	22820	81.4	7.5	72
0.000	3.4	694	23880	90.5	0.0	0

METRIC DATA

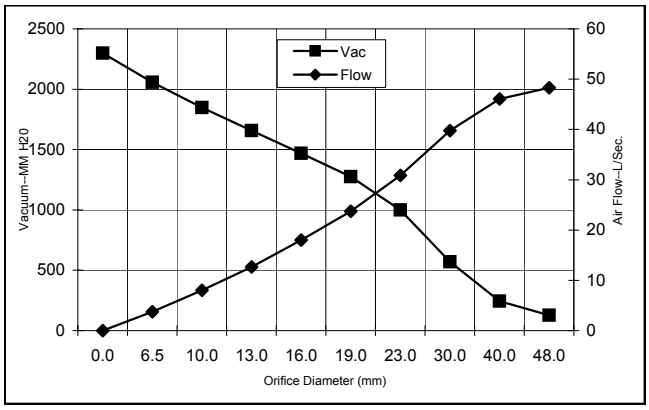

Orifice (mm)	Amps	Watts (In)	RPM	Vac (mm H2O)	Flow (L/Sec)	Air Watts
48.0	5.1	1063	18702	127	48.3	60
40.0	5.1	1044	18659	244	46.1	111
30.0	5.1	1041	18667	569	39.7	221
23.0	5.0	1026	18848	999	30.9	300
19.0	4.8	989	19252	1274	23.7	296
16.0	4.6	943	19835	1468	18.0	259
13.0	4.3	883	20634	1656	12.7	205
10.0	4.0	817	21604	1847	8.0	144
6.5	3.6	750	22767	2058	3.7	75
0.0	3.4	694	23880	2299	0.0	0

Note: Metric performance data is calculated from the ASTM data above.

* Data represents performance of a typical motor sampled from a large production quantity. Individual motor data may vary due to normal manufacturing variations.

Test Specs:	220 volts	**Minimum Sealed Vacuum:**	88.0"	**ORIFICE:**	13 mm	**Minimum Vacuum:**	64.0"	**Maximum Watts:**	1050

DIMENSIONS

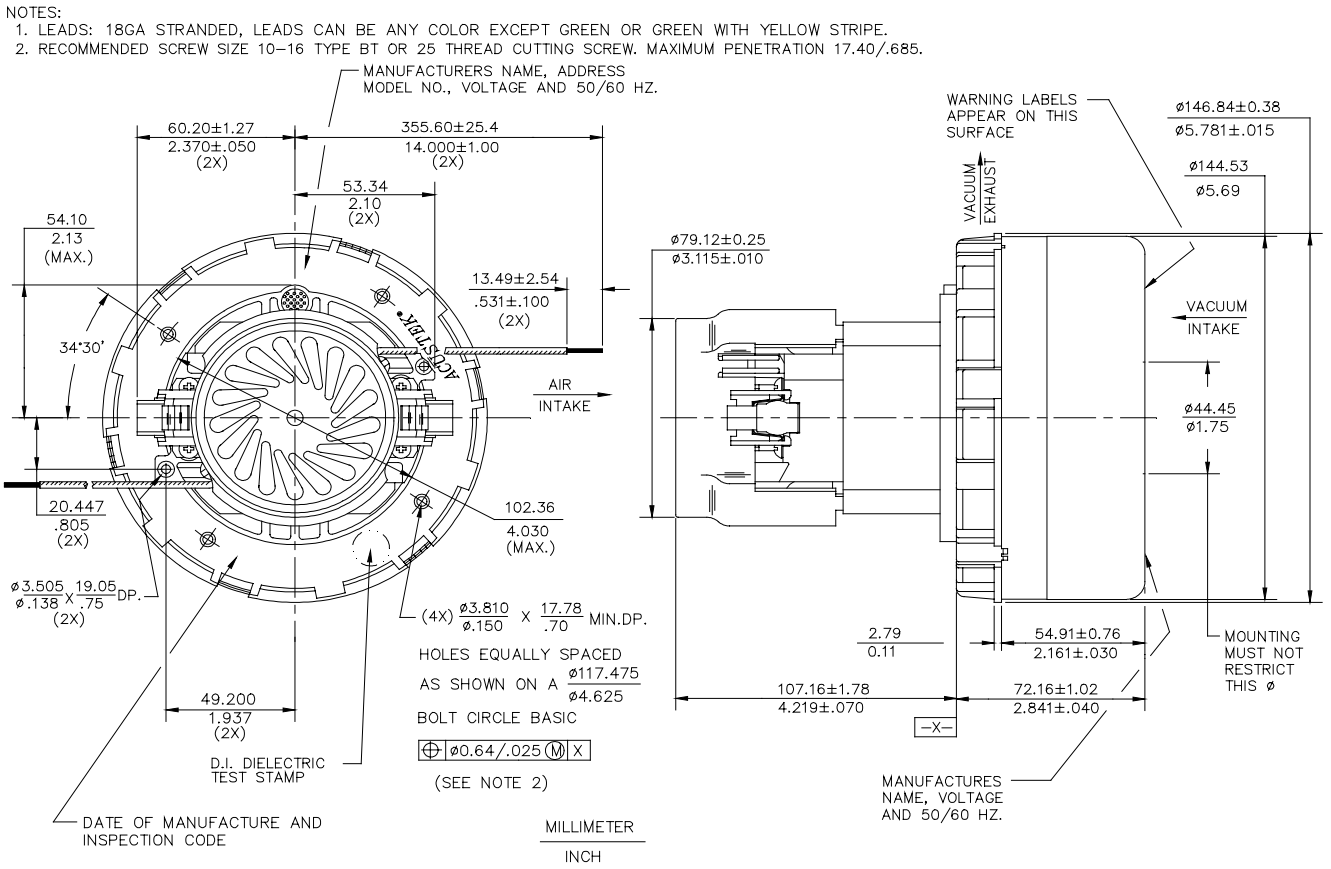

IMPORTANT NOTE: *Pictorial and dimensional data are subject to change without notice. Contact factory for current revision levels.*

WARNING - When using AMETEK Lamb Electric bypass motors in machines that come in contact with foam, liquid (including water), or other foreign substances, the machine must be designed and constructed to prevent those substances from reaching the fan system, motor housing, and electrical components. Lamb Electric vacuum motors other than hazardous duty models should not be applied in machines that come in contact with dry chemicals or other volatile materials. Failure to observe these precautions could cause flashing (depending on volatility) or electrical shock which could result in property damage and severe bodily injury, including death in extreme cases. All applications incorporating Lamb Electric motors should be submitted to appropriate organizations or agencies for testing specifically related to the safety of your equipment.

AMETEK/Lamb Electric Division
627 Lake Street
Kent, Ohio 44240
U.S.A.
Tel: (330) 673-3451
Fax: (330) 673-8994

Ametek GmbH
P. O. Box 1251
D-71667 Marbach
Germany
Phone: + 49-714-484-9512
Fax: + 49-714-484-9513

AMETEK/Singapore Private Limited
10 Ang Mo Kio Street 65
 # 05-12 Techpoint
Singapore 2056
Tel: + 65-484-2388
Fax: + 65-481-6588

Issued: March, 1998